Dove Tail “DT” Collapsible Core

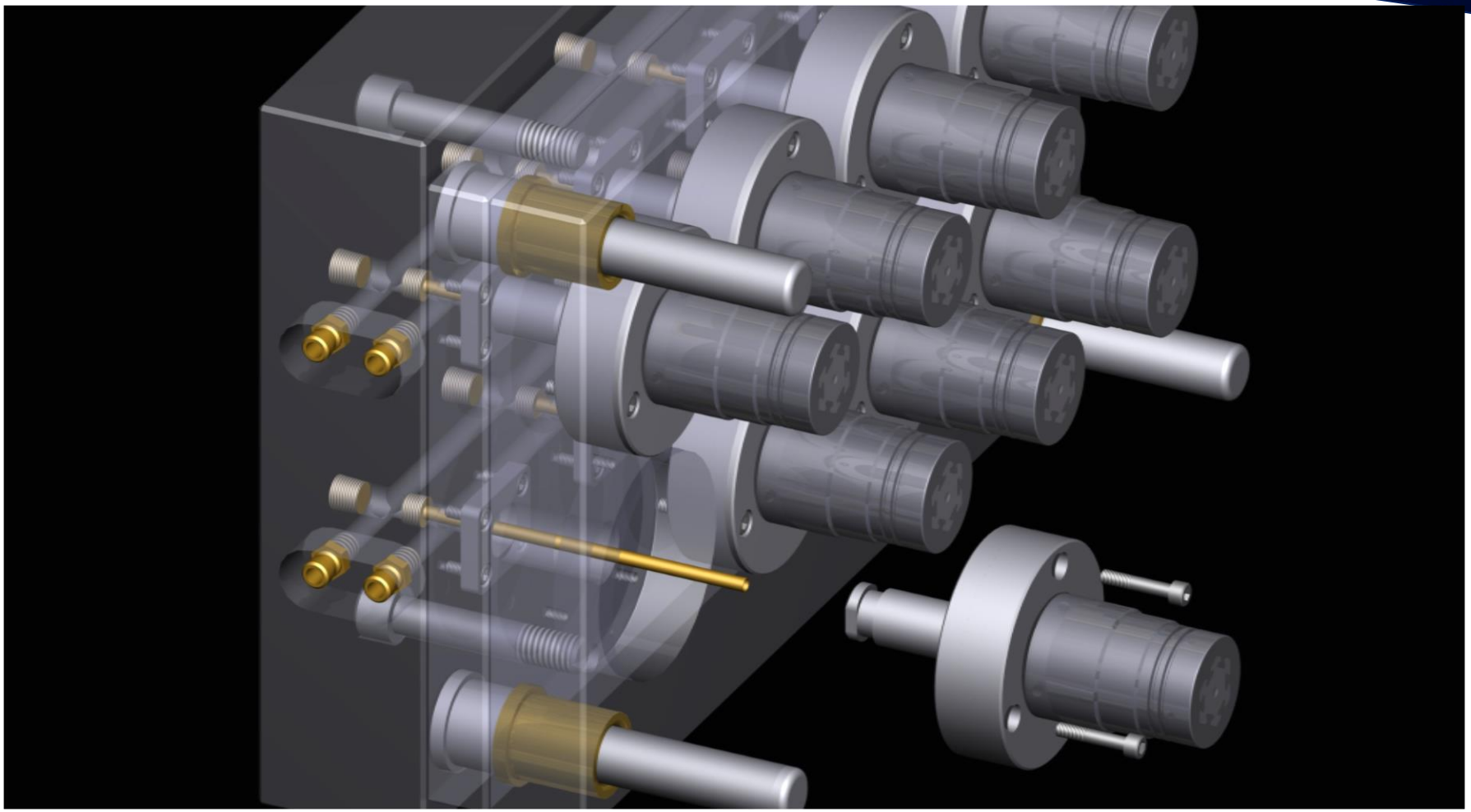

Training Manual

ROEHR TOOL SOLUTIONS, INC.

Outline

DT Core Overview

DT Core Overview

Collapsing Cores

- Developed in 1968 by George Roehr
- Roehr Tool has been the industry leader in c-cores technology
- Manufactured in Boston, MA, USA
- Progressive purchased Roehr Tool in 2006
- Added standard line of Dove Tail Cores in 2009
- Purchased by Dave Helenius and Keith Edwards in 2016
- Added the DT SUB-10 for very small undercuts and threads in 2015
- Expanded the Dove Tail standard core to include 23 available sizes in 2016

Styles of Collapsing Core

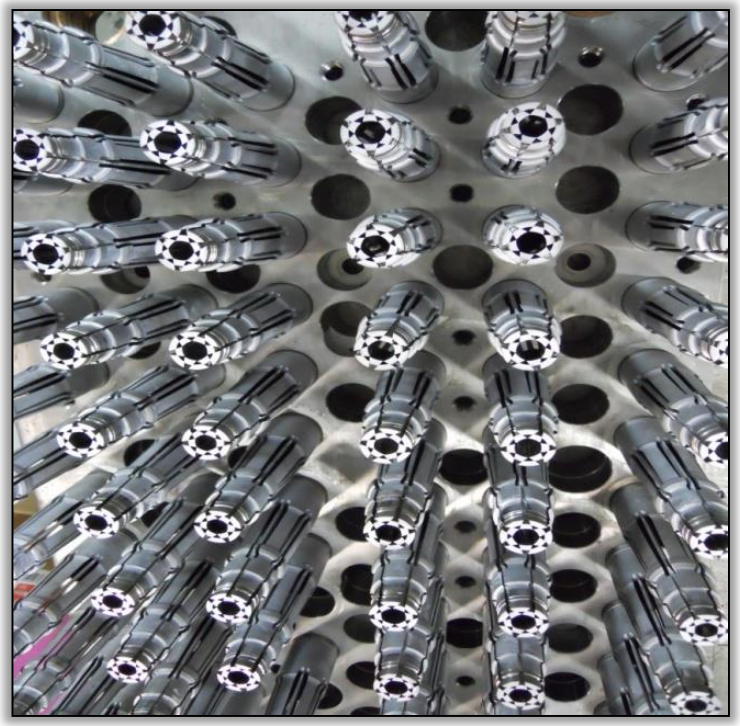

Spring / Flexing Steel Type

Mechanical / Dovetail Type

DT Core Overview

Industry perception of C-Cores in the past, “Option 3” behind

- Jump or strip thread molds: Simplest method but limits part design and can create part quality issues
- Unscrewing molds: Complex tooling and high maintenance molds

Game has changed

- Tough economic times: people are challenging traditional methods
- Dove Tail Core: mechanical compliment to product line that overcomes many misconceptions and limitations

Result: increased profits and optimized part design

ROEHR TOOL SOLUTIONS, INC.

DT Core Overview

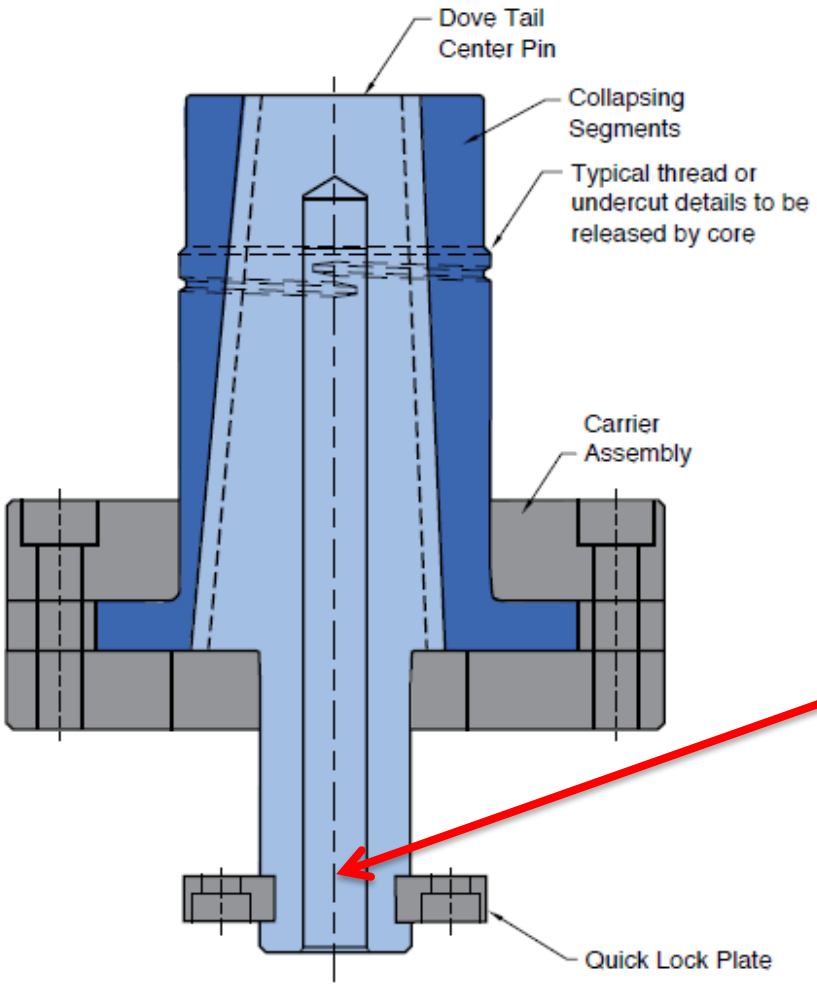

Collapsing Segments

Material: A-2, 54-57 HRC

- Designed to mechanically collapse when the center pin is withdrawn
- The fit between the segments is controlled to permit flash-free molding

Center Pin

Material: D-2, 59-61 HRC

- Serves to expand the segments of the core to their molding position
- The pin may be flush to the core face
- Integrated cooling line

Carrier Assembly

Material: D-2, 59-61 HRC

- Mounts DT Core assembly to the mold carrier plate
- Provides guided and anti-rotational segment movement

DT Core Overview

Eleven Piece Assembly

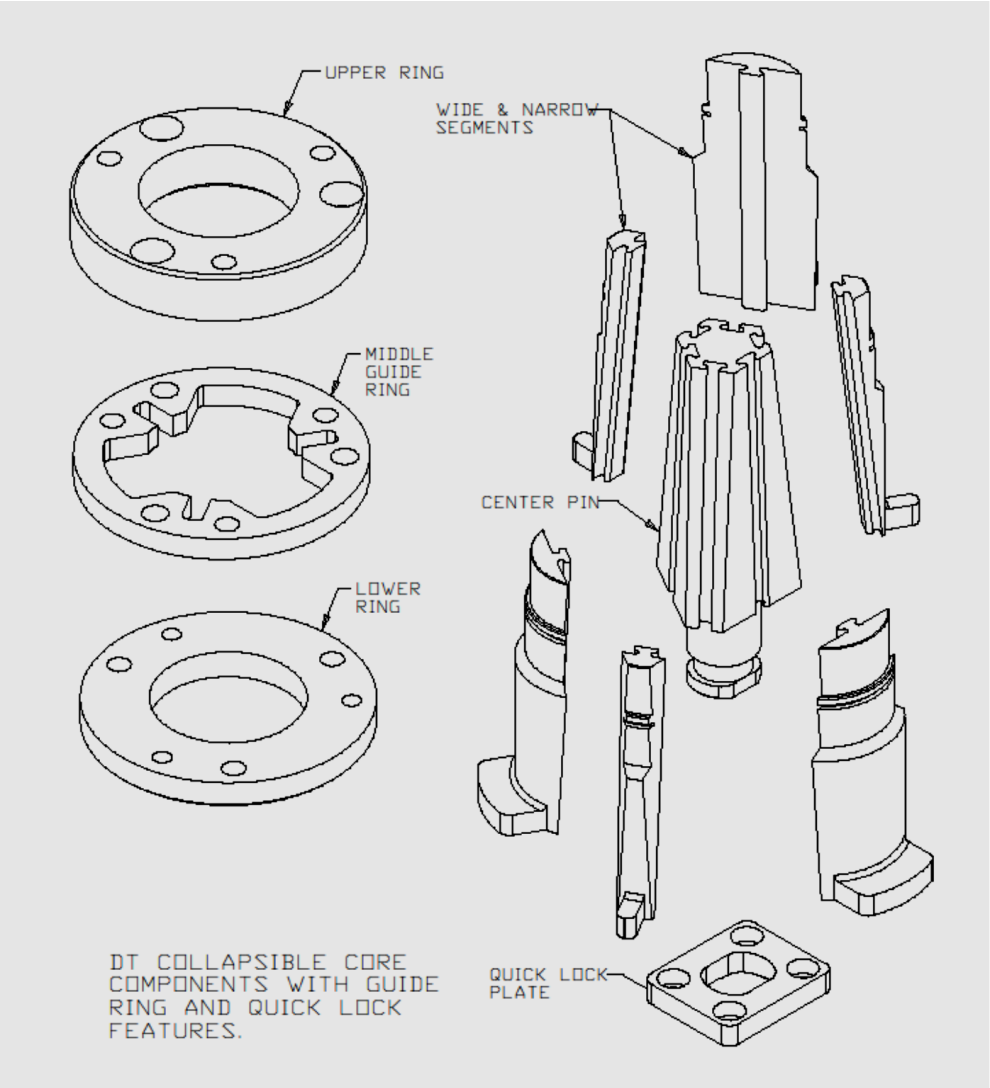

DT Core Overview

Standard Sizes

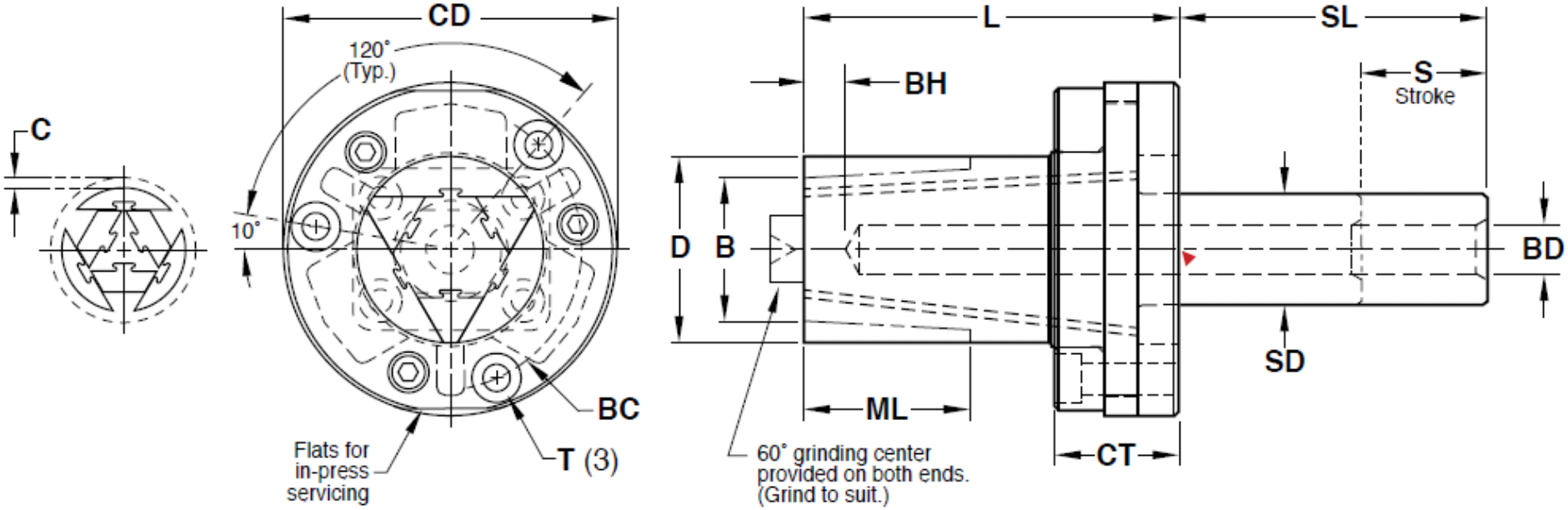

Note: All dimensions and tolerances are in millimeters.

► CAD insertion point

CATALOG NUMBER	D Maximum Outer Diameter	B Minimum Inner Diameter +3°/Side	ML Maximum Molding Length	C Maximum Collapse	CD Carrier Diameter +0.00 -0.05	CT Carrier Assembly Thickness ±0.05	L Core Length +0.01 -0.00	SL Shaft Length	SD Shaft Diameter +0.00 -0.02	BD Cooling Hole Diameter	BH Distance to Cooling Hole	BC Mounting Screw Bolt Circle	T Mounting Screws	S Maximum Collapse Stroke
DT18	21	17	22	1.1	53	21	60	60	16	6	6	40	M5 x 25	34
DT28	33	25	28	1.6	60	22	67	60	20	8	8	47	M5 x 25	38
DT38	42	33	43	2.1	76	28	85	60	25	10	10	60	M6 x 35	54
DT48	54	42	50	2.4	98	37	104	70	30	12	12	78	M8 x 40	62

ROEHR TOOL SOLUTIONS, INC.

Expanded Standard DT

COLLAPSIBLE CORES
DOVETAIL "DT" SERIES

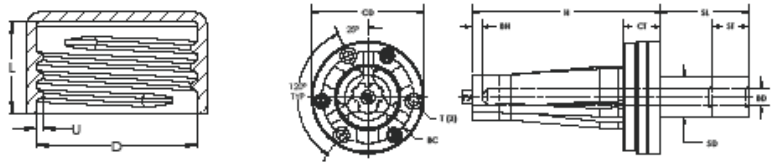

CATALOG NUMBER	D Maximum Outer Diameter	U Max Undercut	L Maximum Molding Length	ST Maximum Collapse Stroke	H Core Length	SD Shaft Diameter	BD Cooling Hole Diameter	BH Distance to Cooling Hole	SL Shaft Length	CD Carrier Diameter	CT Carrier Assembly Thickness	BC Mounting Screw Bolt Circle	T Mounting Screws (SHCS)
DT1010	10.00-10.99mm .394-.433in	.36mm .014in	7.5mm .295in	43.5mm 1.713in	87mm 3.425in	10.5mm .413in	3mm .1in	5mm .2in	58mm 2.283in	50mm 1.969in	21mm .827in	37mm 1.457in	M5 x 25
DT1111	11.00-11.99mm .433-.472in	.41mm .016in	8mm .315in	44.5mm 1.752in									
DT1212	12.00-12.99mm .472-.511in	.46mm .018in	8.5mm .335in	45.5mm 1.791in	87mm 3.425in	12mm .472in	4mm .2in	5mm .2in	59mm 2.323in	52mm 2.047in	21mm .827in	38mm 1.496in	M6 x 35
DT1313	13.00-13.99mm .512-.551in	.51mm .020in	9mm .354in	46.5mm 1.831in									
DT1414	14.00-14.99mm .551-.590in	.56mm .022in	9.5mm .374in	47mm 1.850in	87mm 3.425in	14mm .551in	5mm .2in	5mm .2in	60mm 2.362in	54mm 2.126in	21mm .827in	41mm 1.614in	M5x25
DT1515	15.00-15.99mm .591-.630in	.61mm .024in	10mm .394in	47.5mm 1.870in									
DT1616	16.00-16.99mm .630-.669in	.66mm .026in	10.5mm .413in	48mm 1.890in	87mm 3.425in	15.5mm .610in	6mm .2in	5mm .2in	62mm 2.441in	56mm 2.205in	21mm .827in	43mm 1.693in	M5x25
DT1717	17.00-17.99mm .669-.708in	.71mm .028in	11mm .433in	48.5mm 1.909in									
DT1819	18.00-19.99mm .709-.787in	.82mm .032in	12mm .472in	50mm 1.969in	99mm 3.898in	18mm .709in	8mm .3in	6mm .2in	61mm 2.402in	63mm 2.480in	24mm .945in	49mm 1.929in	M6x30
DT2021	20.00-21.99mm .787-.866in	.92mm .036in	12.5mm .492in	55mm 2.165in									
DT2224	22.00-24.99mm .866-.984in	1.04mm .041in	13mm .512in	59mm 2.323in	109mm 4.291in	22mm .866in	10mm .4in	6mm .2in	64mm 2.520in	69mm 2.717in	24mm .945in	55mm 2.165in	M6x30
DT2527	25.00-27.99mm .984-1.102in	1.20mm .047in	15mm .591in	66.5mm 2.618in									
DT2830	28.00-30.99mm 1.102-1.220in	1.36mm .053in	18mm .709in	71mm 2.795in	129mm 5.079in	28mm 1.102in	12mm .5in	6mm .2in	60mm 2.362in	77mm 3.031in	26mm 1.024in	63mm 2.480in	M6x30
DT3133	31.00-33.99mm 1.220-1.338in	1.50mm .059in	21mm .827in	78mm 3.071in									
DT3436	34.00-36.99mm 1.339-1.456in	1.73mm .068in	22mm .866in	79mm 3.110in	139mm 5.472in	34mm 1.339in	14mm .6in	6mm .2in	64mm 2.520in	93mm 3.661in	27mm 1.063in	75mm 2.953in	M8x30
DT3739	37.00-39.99mm 1.457-1.574in	1.88mm .074in	24mm .945in	85mm 3.346in									
DT4042	40.00-42.99mm 1.575-1.693in	2.06mm .081in	25mm .984in	86mm 3.386in	151mm 5.945in	39mm 1.535in	17mm .7in	6mm .2in	65mm 2.559in	101mm 3.976in	32mm 1.260in	83mm 3.268in	M8x35
DT4345	43.00-45.99mm 1.693-1.811in	2.24mm .088in	27mm 1.063in	93mm 3.661in									
DT4648	46.00-48.99mm 1.811-1.929in	2.42mm .095in	28mm 1.102in	94mm 3.701in	161mm 6.339in	42mm 1.654in	20mm .8in	6mm .2in	69mm 2.717in	110mm 4.331in	32mm 1.260in	90mm 3.543in	M8x35
DT4951	49.00-51.99mm 1.929-2.047in	2.57mm .101in	31mm 1.220in	99mm 3.898in									
DT5254	52.00-54.99mm 2.047-2.165in	2.77mm .109in	32mm 1.260in	100mm 3.937in	183mm 7.205in	50mm 1.969in	22mm .9in	6mm .2in	85mm 3.346in	130mm 5.118in	39mm 1.535in	107mm 4.213in	M10x45
DT5557	55.00-57.99mm 2.165-2.283in	2.95mm .116in	34mm 1.339in	106mm 4.173in									
DT5860	58.00-60.99mm 2.283-2.401in	3.10mm .122in	36mm 1.417in	111mm 4.370in									

FOR SIZES LARGER THAN 60MM, CONTACT ROEHR DIRECTLY

- RTS offers the largest range of standardized components for thread and undercut release as well as engineered customs.
- Our standards allow for easy selection with documented supporting data, including mold base specifications and operating guidelines.
- Repairs and replacements are more readily available keeping the customers' molds running more efficiently.
- With the DME/Roehr partnership, customer support is industry leading around the world to say the least.

ROEHR TOOL SOLUTIONS, INC.

SUB-10 DT

- The Sub-10 DT Cores make it possible to release very small threads and undercuts in molded caps, connectors and small medical parts.
- Allows molding of parts with 7-10mm ID.
- Simpler alternative to unscrewing molds.
- Reduces cycle time and maintenance requirements.

ROEHR TOOL SOLUTIONS, INC.

DT Core Overview

Customs & Semi-Standards

- Range from **10mm-200mm**

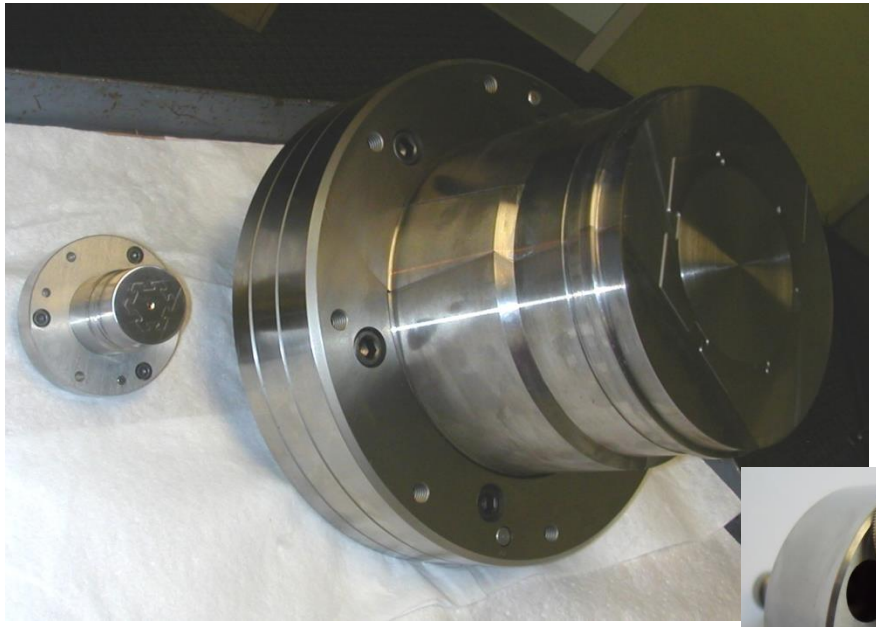

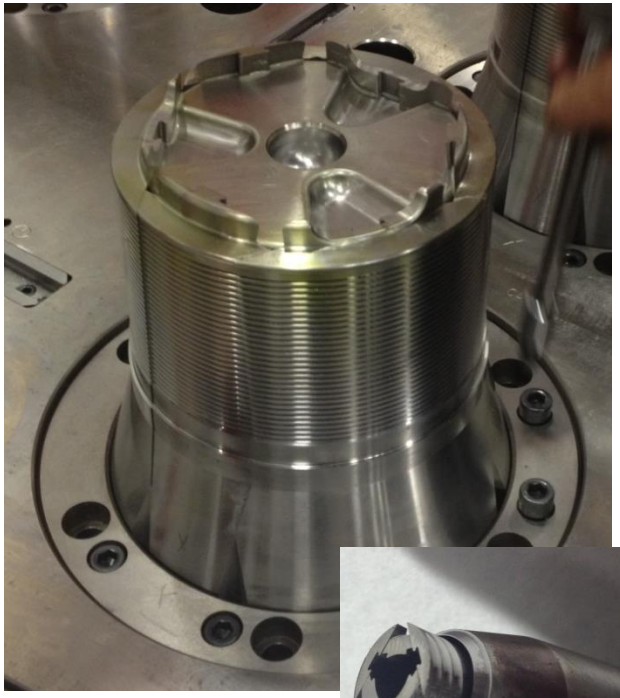

ROEHR TOOL SOLUTIONS, INC.

DT Core Overview

Value Proposition

- Capable of doing parts many other technologies can't do.
- DT Cores provide advantages to customers over Jump Thread and Unscrewing Molds.
- Primary benefits to OEMs & Molders;
  - **Increasing profits through faster cycle time & simplified tooling**
  - **Part design optimization to gain advantage over competition**

DT Core Overview

Advantages vs Unscrewing Molds;

- Simplified Mold Design
- Easier Mold Set-Up
- Sequencing Options
- Less Maintenance
- Better Part Quality
- Improved Part Design
- Reduced Cycle Time

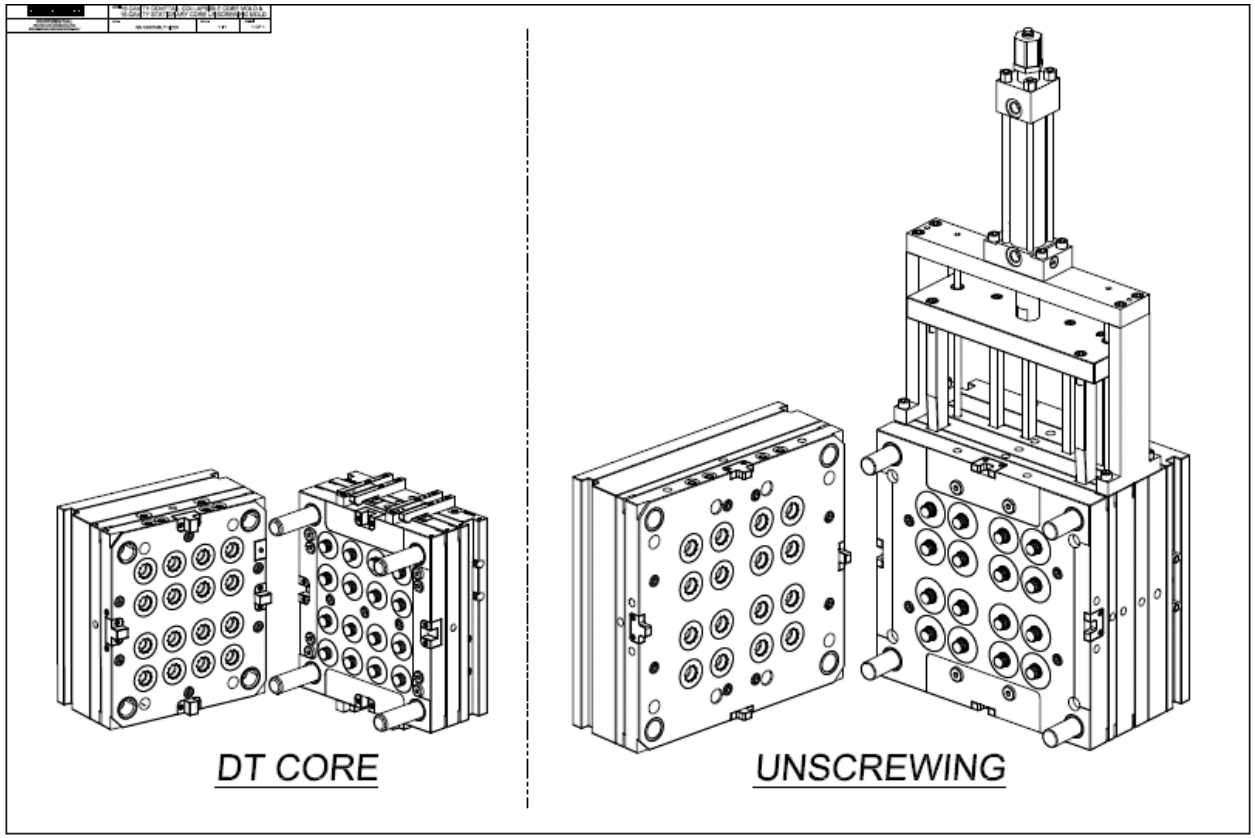

ROEHR TOOL SOLUTIONS, INC.

Cost Savings Calculation

C-Core Cost Calc-310.xlsx - Microsoft Excel

Comparison: Collapsing Cores vs Unscrewing or Jump Thread

Instructions:
1) Fill in all grey boxes (except those marked optional) for a typical unscrewing or jump thread mold application.
2) Estimates have been provided but can be replaced with your input.
3) Review Savings Summary at bottom and contact Progressive / Roehr with questions.

* This is NOT a quote. Designs can be submitted to Roehr Tool at information@roehrtool.com or call 978-562-4488.
* For animations or more information, please visit http://www.roehrtool.com/Demo/

Click Picture to Download

Project Overview:

Customer Name:	
Project Description:	
Date:	
C-Core vs	Unscrewing Mold

Part/Project Data:

Part OD (in):	
Resin Type:	
Part Cost Est ($):	
Annual Volume:	
Expected Life of Mold (yrs):	

Production Data:

Run Hours/Day=	2
Run Days/Year=	3(
Press Rate:	$
Toolroom Rate:	$
Productivity Est (Unscrew):	80

Mold Data:

Cavities:	
Threaded Core Cost:	$1,200
C-Core Cost (optional):	

	# /Y
Stops from; Oil Leaks, Drop Rack, Broken Rollers, etc	8
Smaller Press ($ Less):	$
Secondary Operation Cost (optional):	0

Cycle Time:

Est Cycle Time of Unscrewing Mold:	
Actual C-Core Cycle Time (optional):	

Quality, Part Rejects:	% Re
Pulled Threads, Ovality, etc	0.5

TEMPLATE, C-CORE

Savings Summary:

Notes;	
Cycle Time Reduction (sec) =	1.8
Mold Capacity: C-Core (units)=	23,563,636
Increased Capacity =	2,827,636
Smaller Mold Base (in) =	3
Mold Cost Variance =	-$24,400
Annual Savings;	
Smaller Press Req, Savings =	$0
TOTAL Part Savings =	$9,300
TOTAL Maintenance Savings=	$2,408
TOTAL Secondary Ops Savings =	$10,000
Savings (year 1) =	-$2,692
Savings (years 2, 3, etc) =	$21,708
TOTAL Savings over Life of Mold =	$84,140
ROI (yrs) =	1

ROEHR TOOL SOLUTIONS, INC.

DT Core Overview

Primary Markets

- Packaging, caps and closures
- Medical caps and fittings
- Plumbing fittings
- Irrigation products
- Electrical connectors and fittings

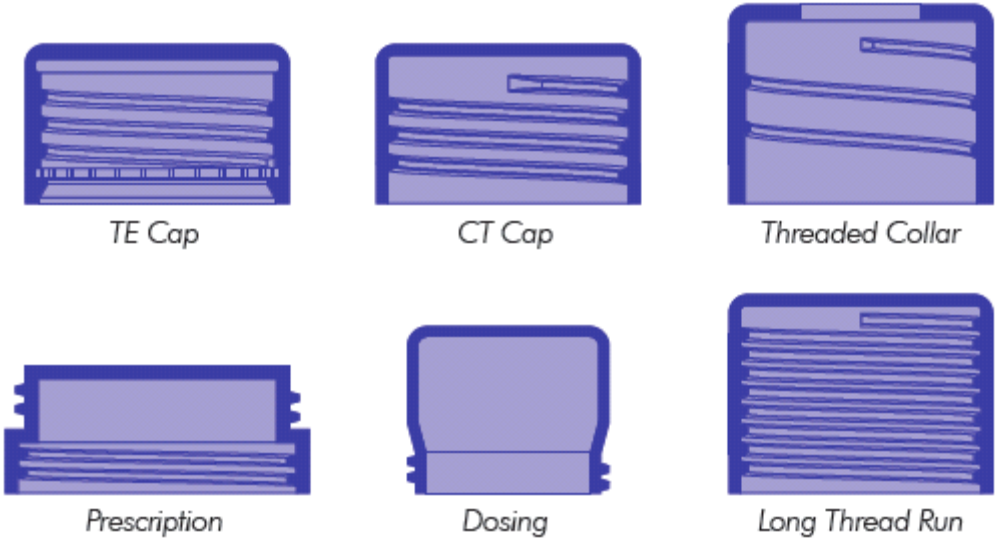

ROEHR TOOL SOLUTIONS, INC.

DT Core Overview

Materials and Temperatures

- From simple Olefins & ABS to more demanding resins like PVC & GF Nylon
- Yes we can make cores for high temperature resins!

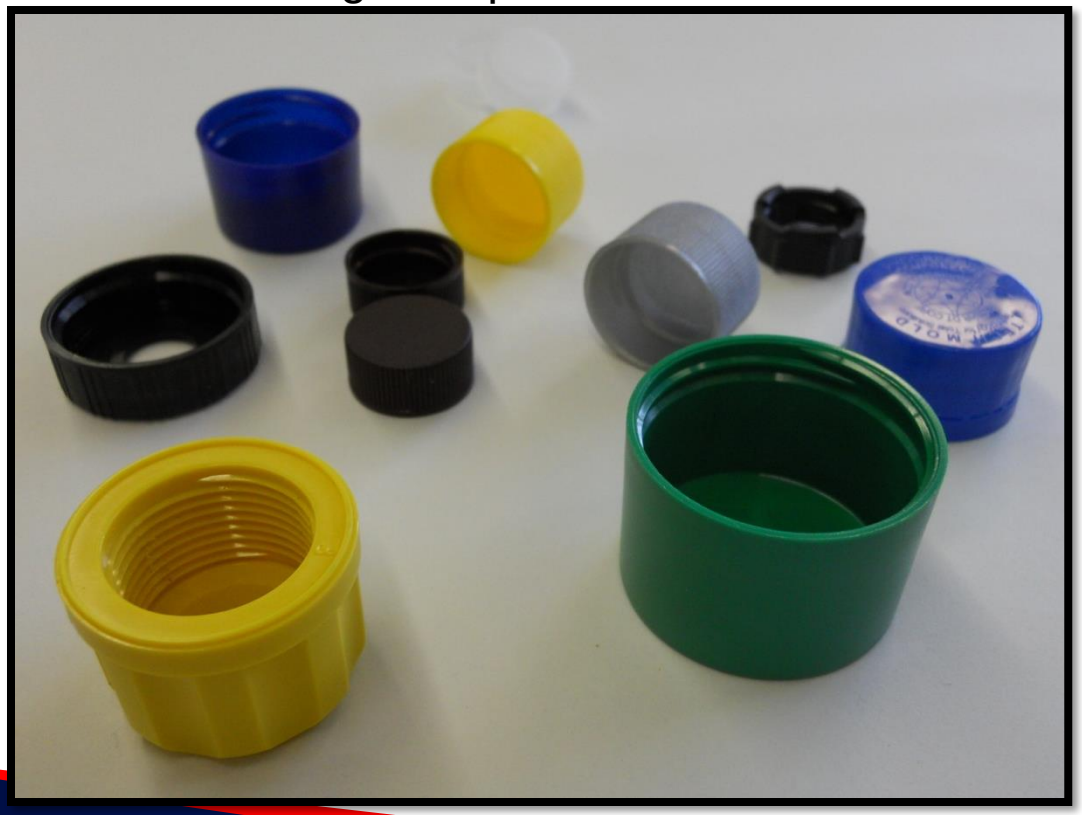

Part Optimization

Part Design Advantages

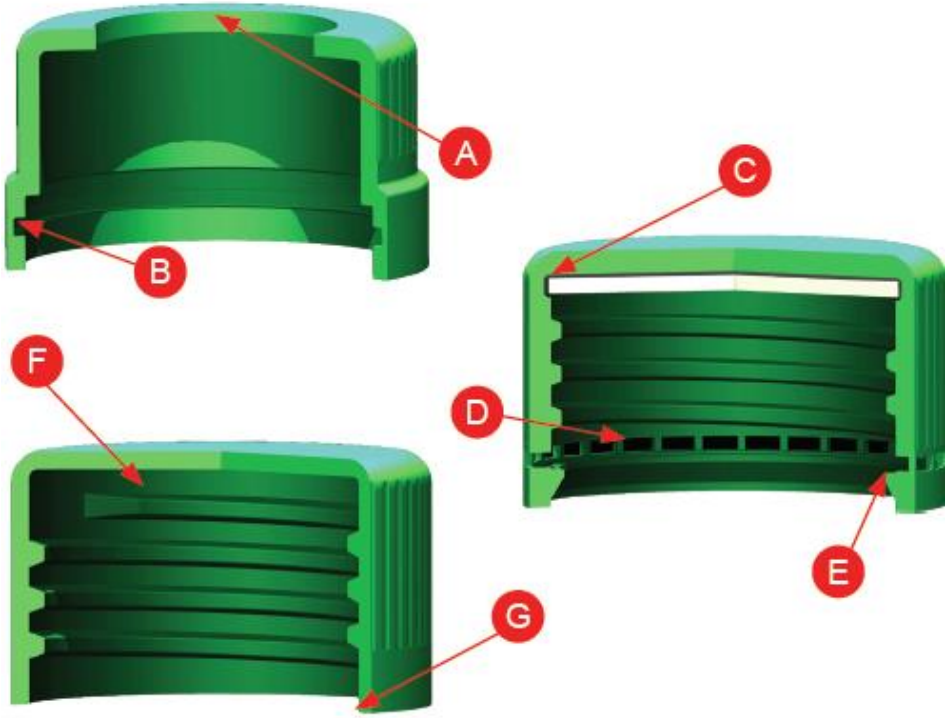

A	Solid shut-offs
B	O-ring groove
C	Retention features for liners, inserts, and more are possible
D	Slots, holes or tamper evident serrations are possible
E	Strong, reliable snap fit designs
F	Threads only where you need them, allowing for better steel conditions
G	Thinner wall sections possible because anti-rotation feature is not needed

Part Optimization

Unscrewing Thread

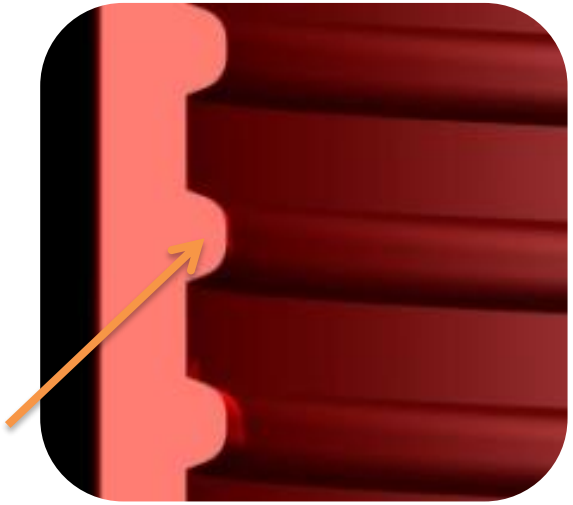

Undercut Profile

- Threads can be made with more aggressive profiles

DT Core Thread

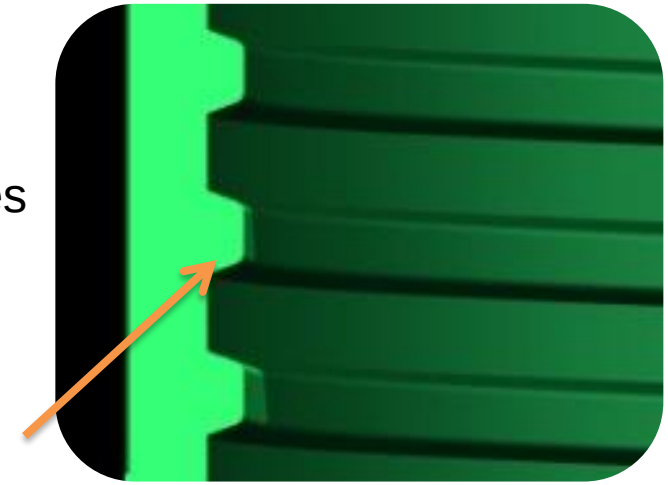

Stripped Snap Bead

- Snap features that normally require large radii for release can now be flat

DT Core Snap Bead

Eliminating Thin Steel Condition

- Many threaded applications are designed to be unscrewed out of the mold which requires the thread be run out the top of the core creating a thin steel condition.
- DT cores allow for threads only where you need them and it's common to recommend taking advantage of this through a part design change.

Unscrewed Thread Design

DT Core Thread Design

Part Optimization

Face to face and side shutoffs

- DT cores can be shutoff onto each other face to face and side actions may be shutoff against the side of the core segments.

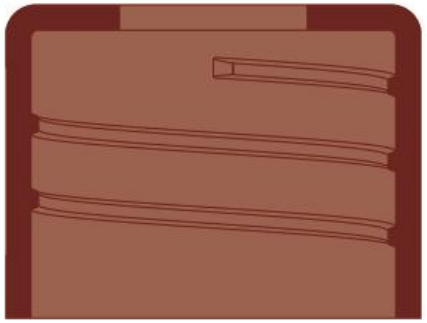

Threaded Collar or Fitting

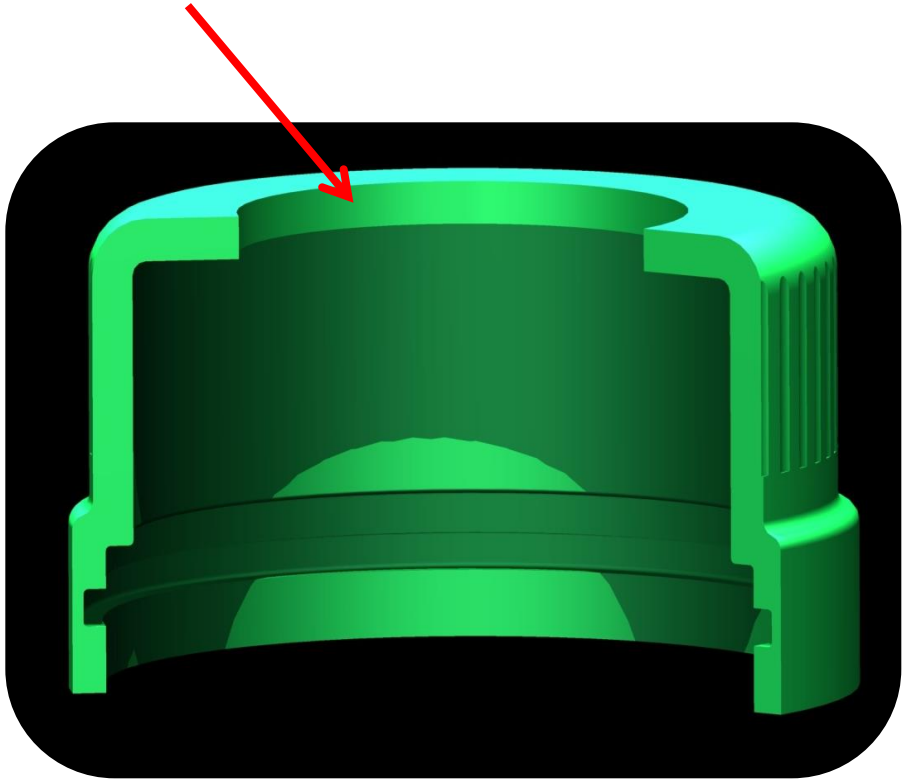

ROEHR TOOL SOLUTIONS, INC.

Part Optimization

Protruding Features

- Parts with features like seals on closures typically can't be done with collapsing cores.

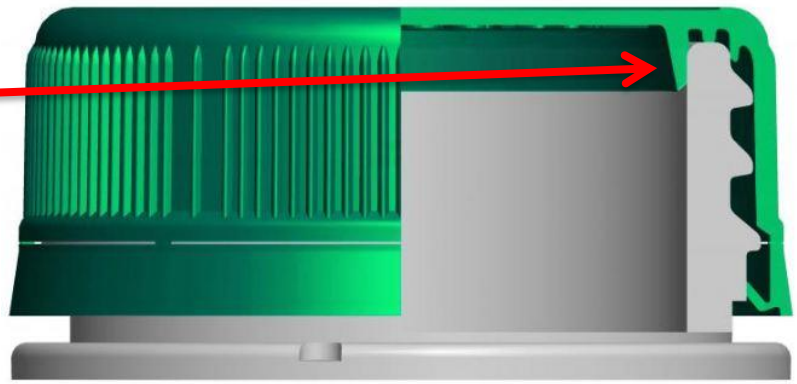

- Exceptions include designs where the core, at the end of its collapse stroke, has resulting "Free Space" between the core and the protruding feature.

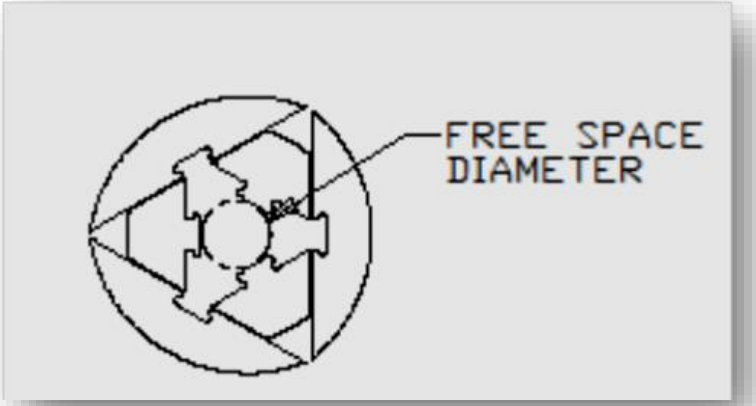

Part Optimization

Undercuts

- Full diameter undercuts are common for; Threads, O-ring Grooves, Snap Features
- Segmented undercuts and internal features are possible as long as they are positioned on the core correctly and drafted so that they release in the direction of the six collapsing segments.

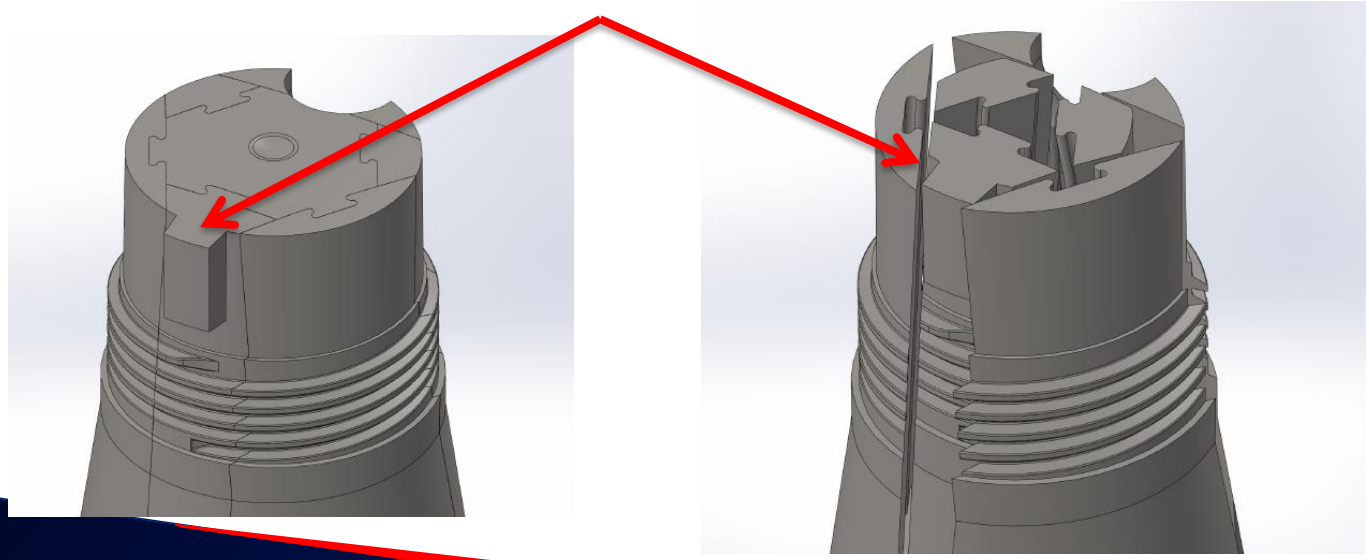

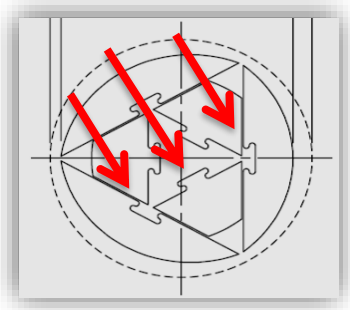

Collapse Range

- Rule of Thumb – 6% per side (.060” per side for every 1” of diameter)
- Part Diameter – 10mm – 400mm
- Max collapse area. (Mid section of wide segments)
- Min collapse points. (Intersection of wide segment edges)

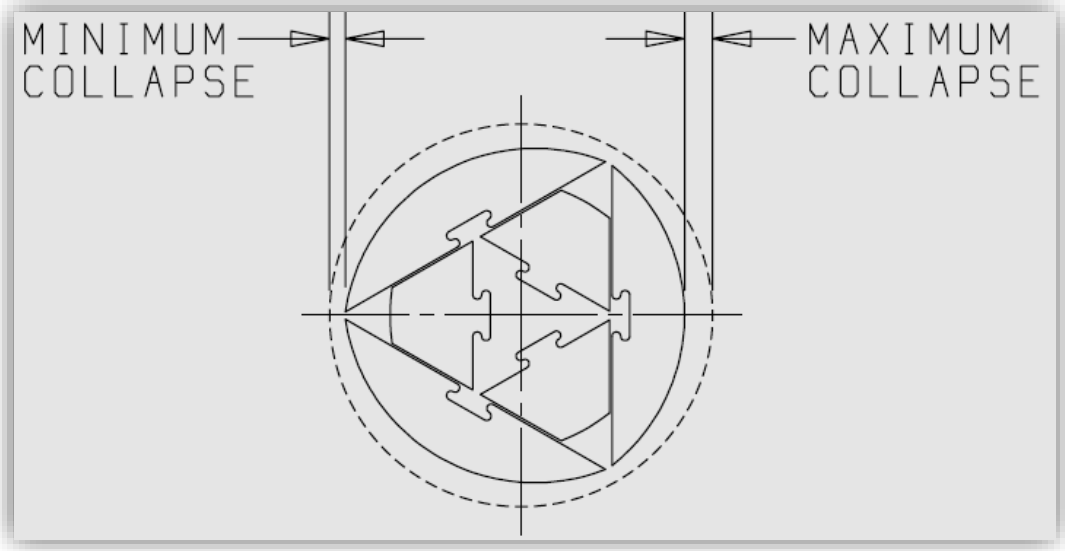

Part Optimization

Calculating required collapse vs undercut depth

- Undercut + Shrink + Clearance = Total Collapse Req'd

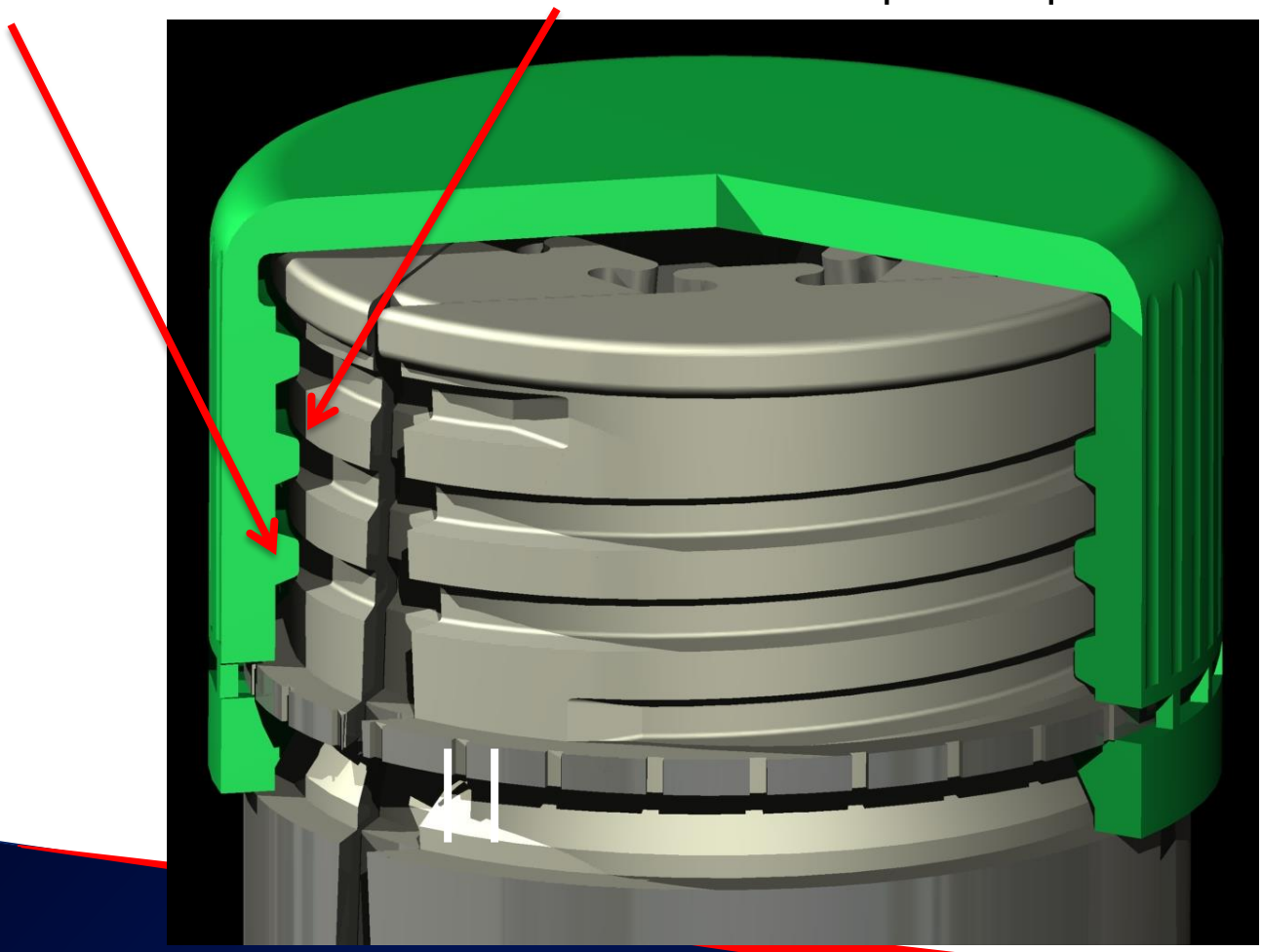

DT Part Review Spreadsheet

ROEHR TOOL CORPORATION

Dove Tail Collapsing Core, Quick Review

Part Information:	mm
Moulding Length:	
Part Major:	
Part Minor:	
Features on Side Wall?	
Features on Top of Core?	

Part Analysis:

U/C Depth:

% of Diameter:

Max U/C per side:

Result:

Part Design Chgs:

Undercut Depth:

Moulding Length:

Side Wall Features:

Top of Core Features:

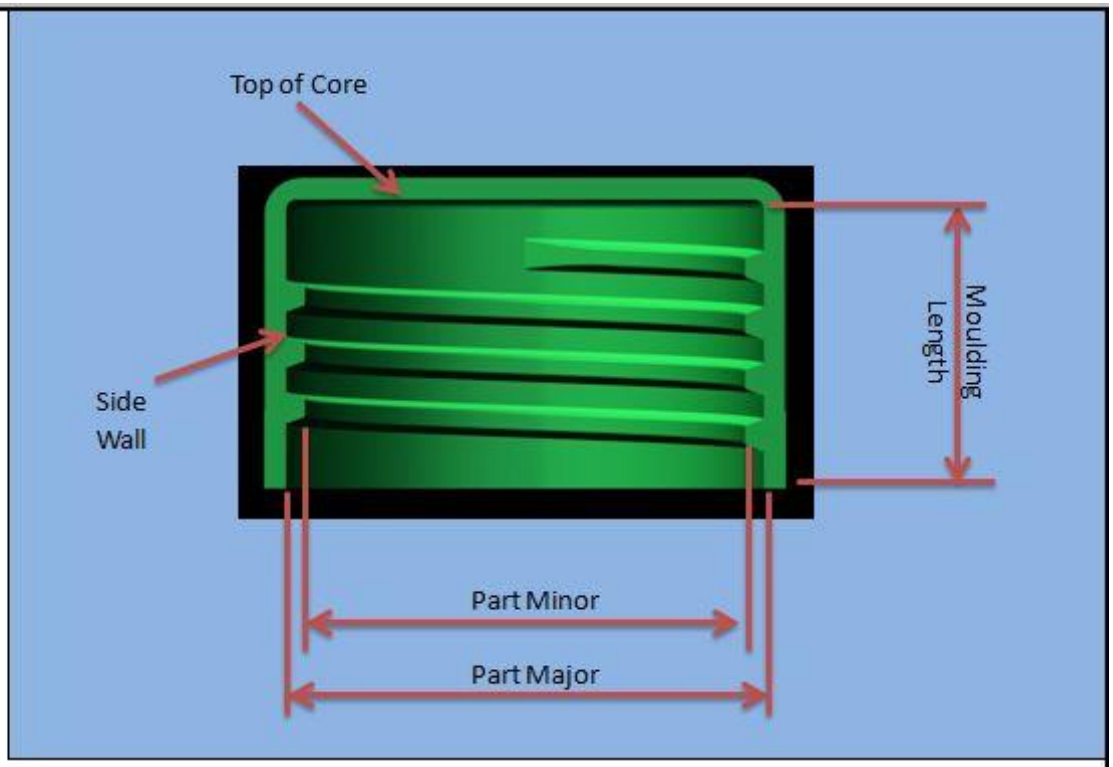

** Estimate only, please send applications to Roehr Engineering for complete review and quote. **

www.roehrtool.com information@roehrtool.com 877-563-1912

Part Optimization

Part Height Influence

- Part height and undercut depth determine collapse stroke and overall core height.
- Roehr Engineering will determine optimal collapse angle and provide customer with max allowable undercut depth.

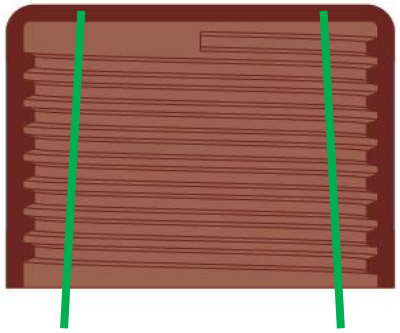

Long Thread Run

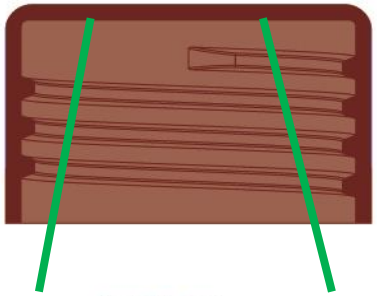

CT Cap

Prototyping Options

Prototype Options

ProtoBridge

- Pre-engineered 4 cavity molds, designed for convertibility and capable of production volumes.
- Intended for the customer looking to trial DT Cores to prove out part and mold design and production capabilities.
- Roehr’s existing molds can be inserted to trial your application.

Click Picture for Animation

Mold Design

Mold Sequence

- Staging methods;
  - Press KO with latch lock
  - Hydraulic cylinders
  - Press open and close

Click Picture for Animation

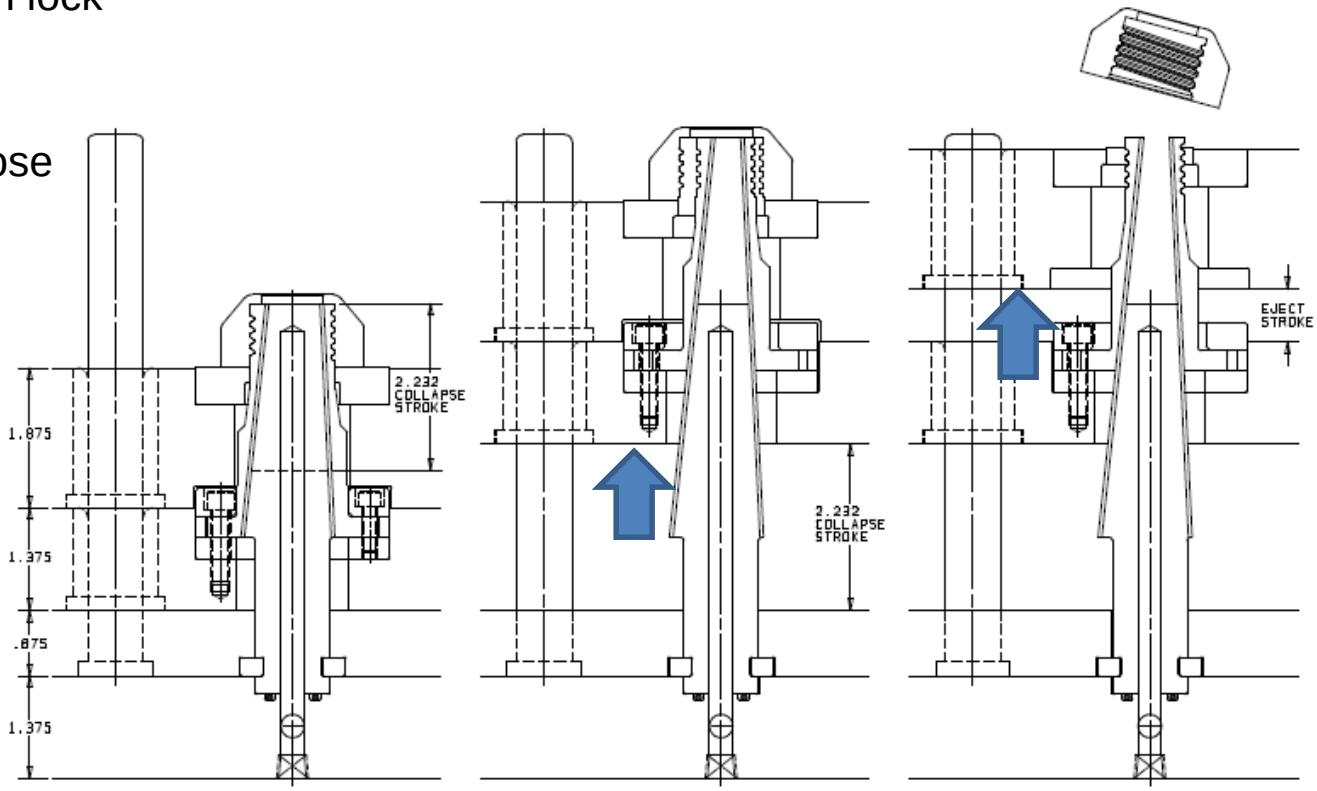

1 - Mold Open | *2 – Collapse* | *3 - Eject*

Mold Design ‘Wizard’

- Roehr Engineering can supply 4 view layouts for most applications with quotes!
- Full mold design services (new and retro-fit) are also available.

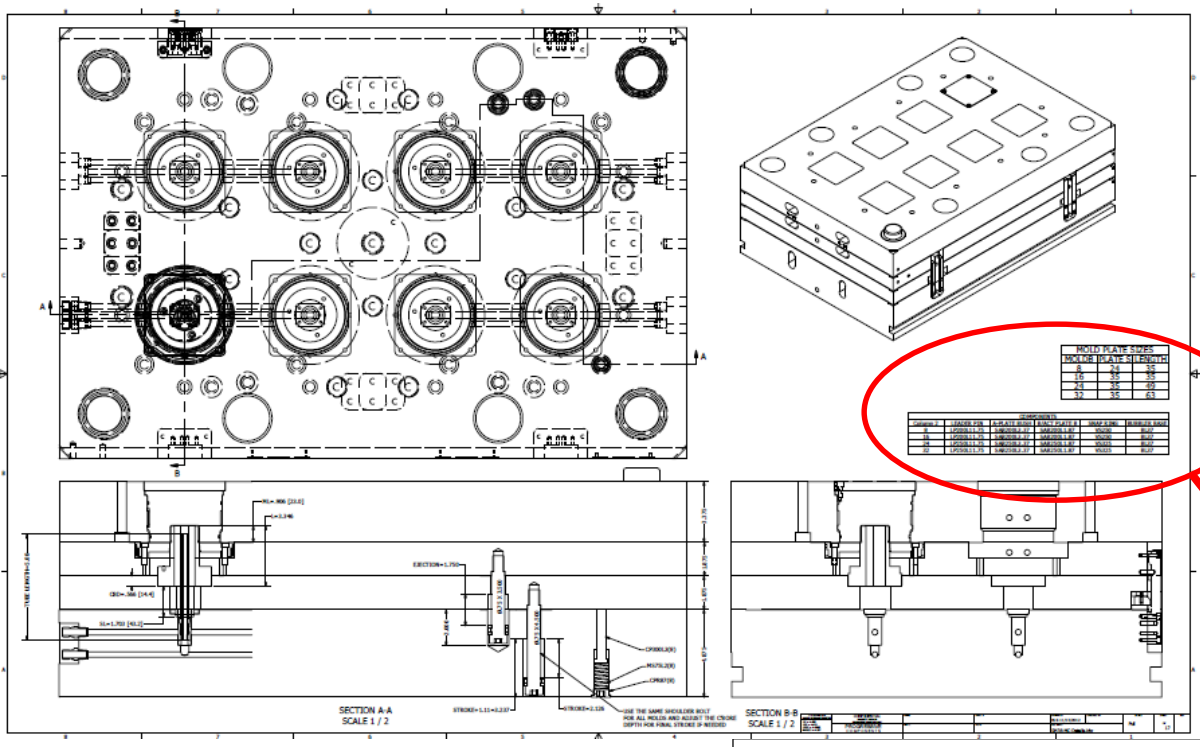

MOLD PLATE SIZES		
MOLDB	PLATE S	LENGTH
8	24	35
16	35	35
24	35	49
32	35	63

COMPONENTS					
Column 2	LEADER PIN	A-PLATE BUSH	B/ACT PLATE B	SNAP RING	BUBBLER BASE
8	LP200L11.75	SAB200L3.37	SAB200L1.87	VS250	BL37
16	LP200L11.75	SAB200L3.37	SAB200L1.87	VS250	BL37
24	LP250L11.75	SAB250L3.37	SAB250L1.87	VS325	BL37
32	LP250L11.75	SAB250L3.37	SAB250L1.87	VS325	BL37

Part Retention: Retention Sleeve (patent pending)

- Some designs require a feature to prevent part from ‘riding’ one of the segments during collapse, which leads to damage.
- Retention sleeve is integrated into the DT core and is independent of the stripper so the part is secured during collapse but then easy to eject.

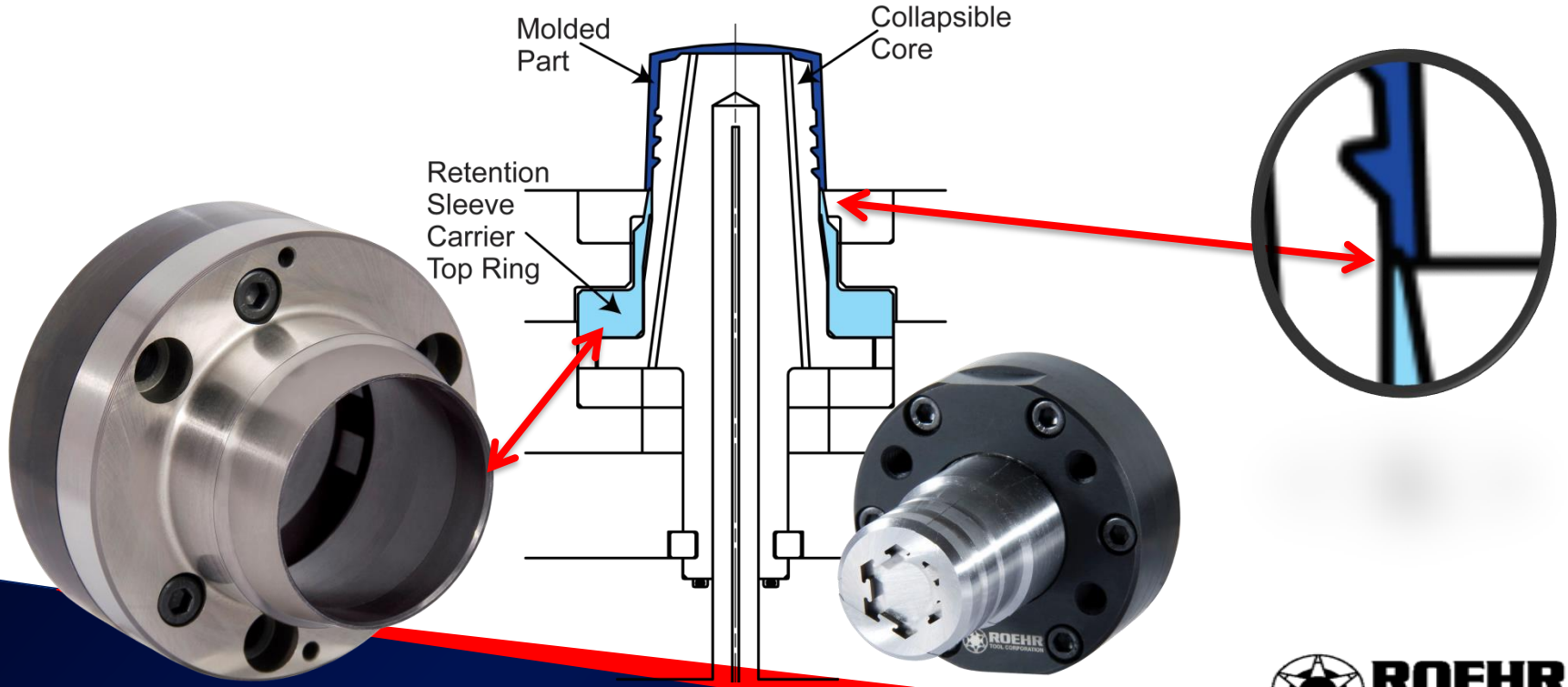

Part Retention: Other

- “10x10” step in stripper ring or cavity block
- Robot assisted ejection

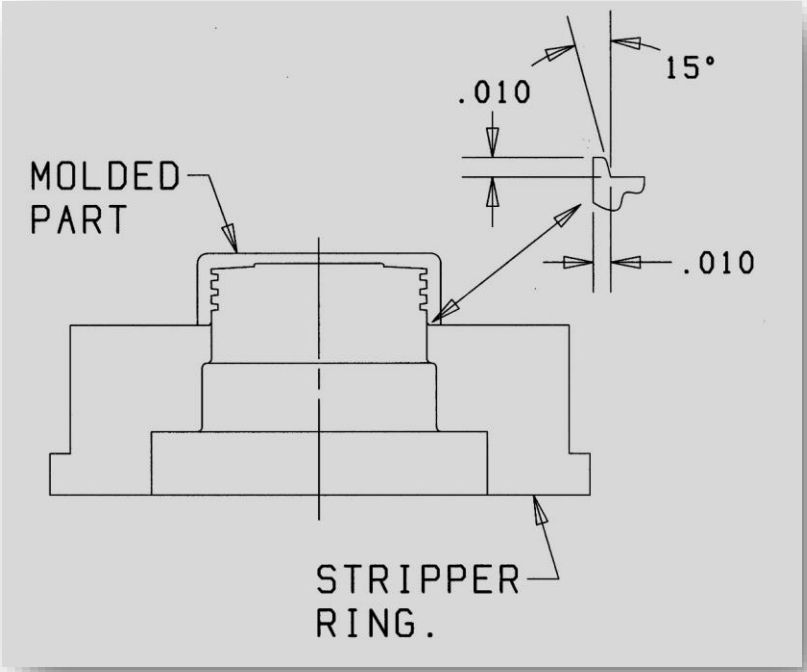

Attachment methods: Quick Lock (patent pending)

Makes DT's removable from parting line for maintenance or conversion.

Attachment methods: Split Ring

Cores are attached to the mold base at the bottom of the shaft with a split ring or quick lock plate and also at the carrier assembly with cap screws.

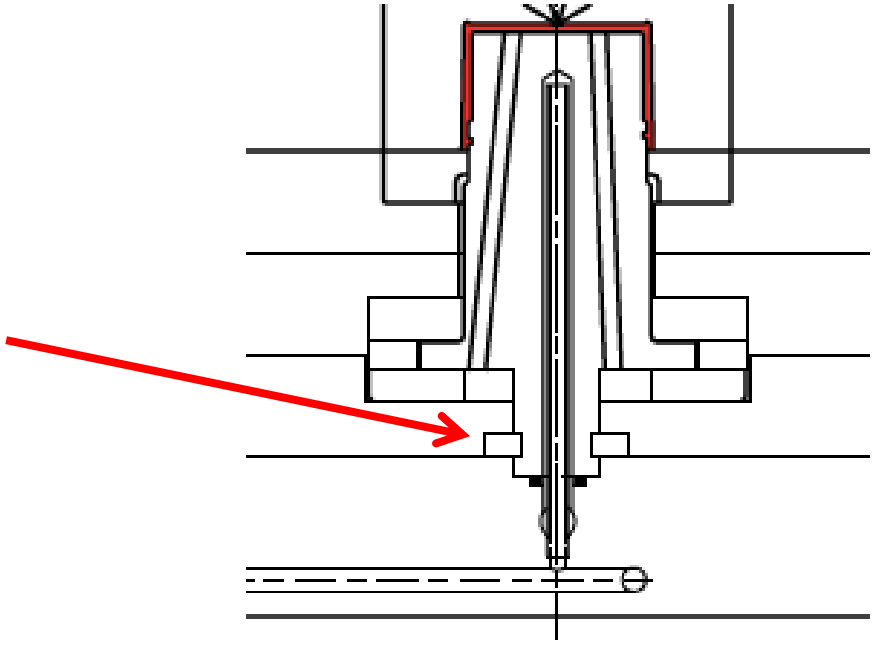

Pancake Core, pg 1

- Use for seal ring applications and witness line free parts.

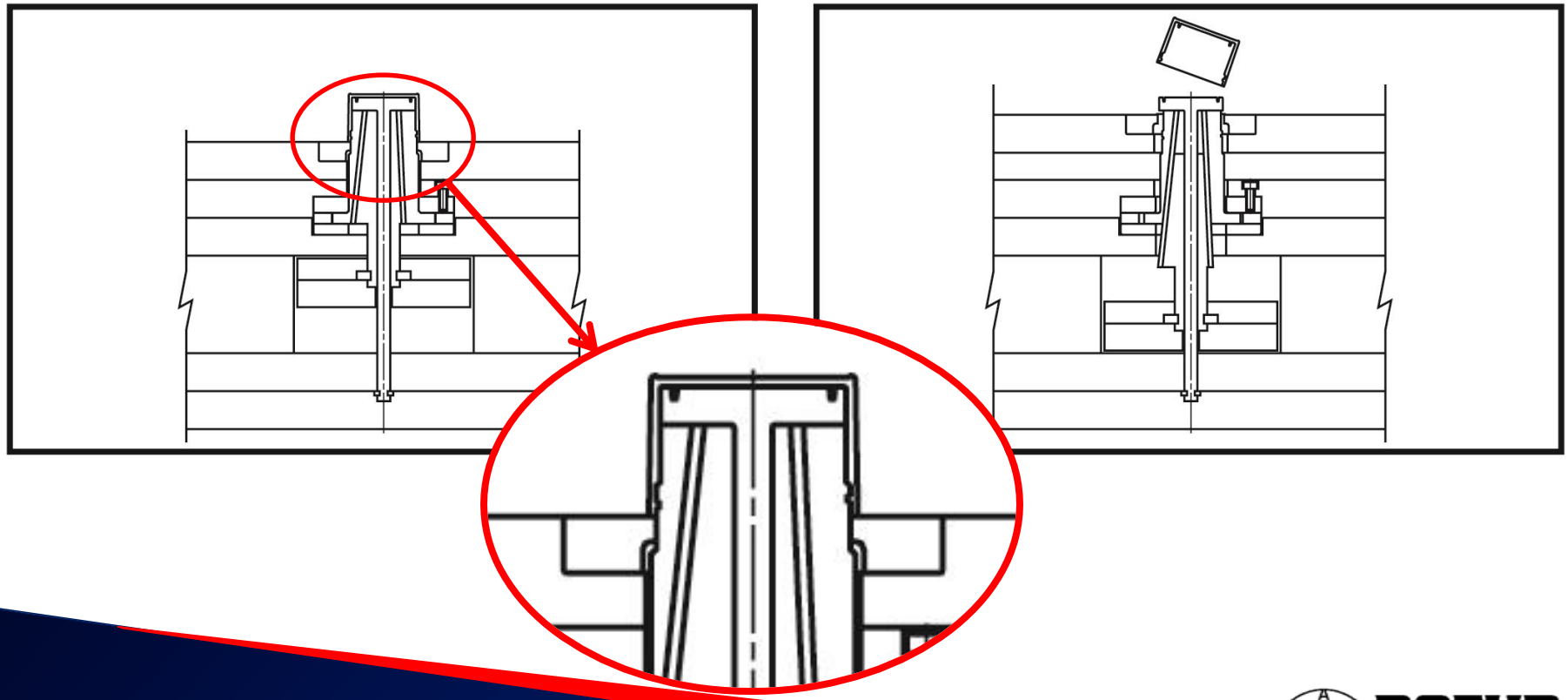

Pancake Core, pg 2

- Use for seal ring applications and witness line free parts.
- Pancake diameter must be smaller then undercut diameter for ejection.

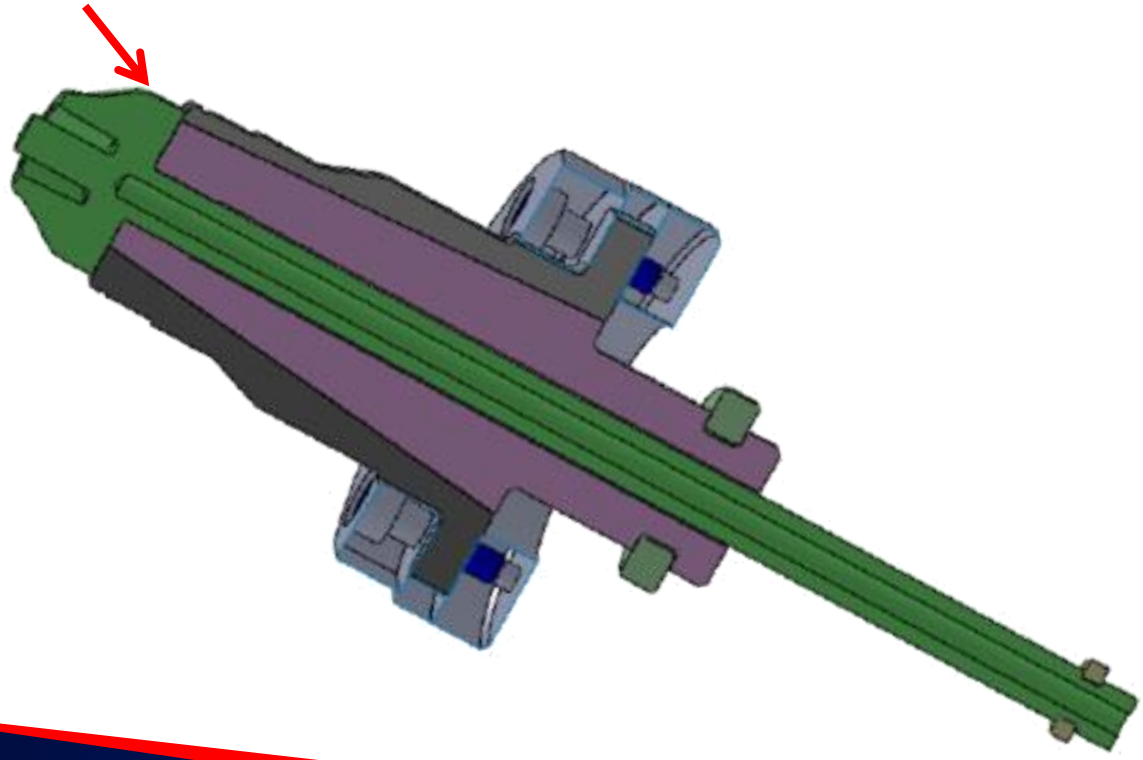

Side Action

- Cam or hydraulic actuation is possible.

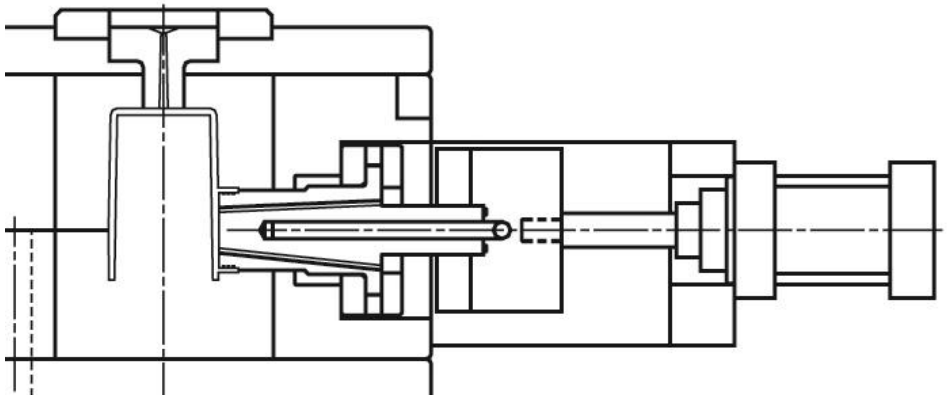

Molding Position

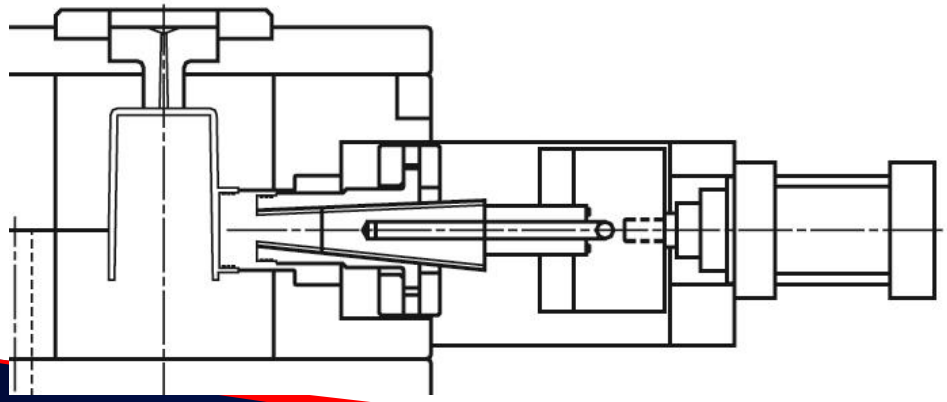

Collapse and Retract

Front half actuated

- Actuate similar to 3-pate runner split before main parting line opens.

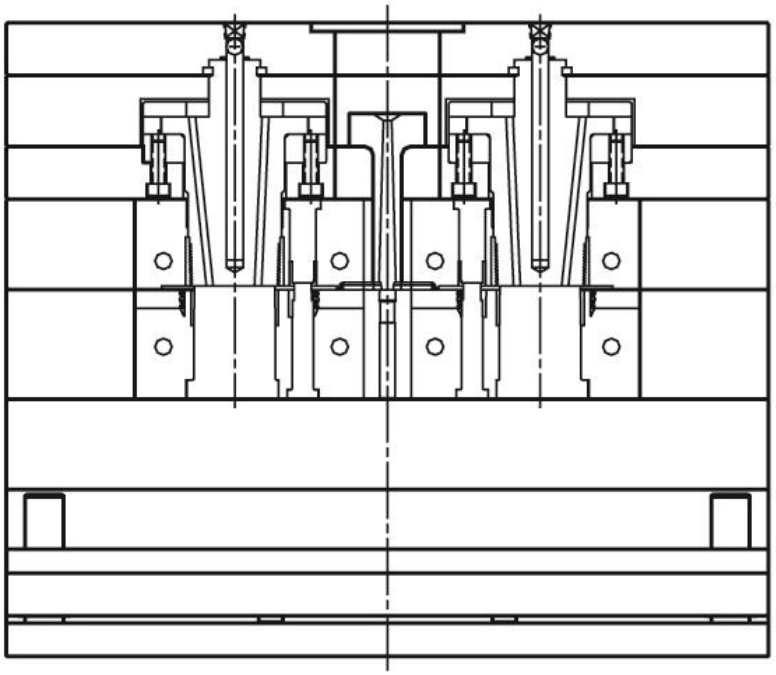

Molding Position

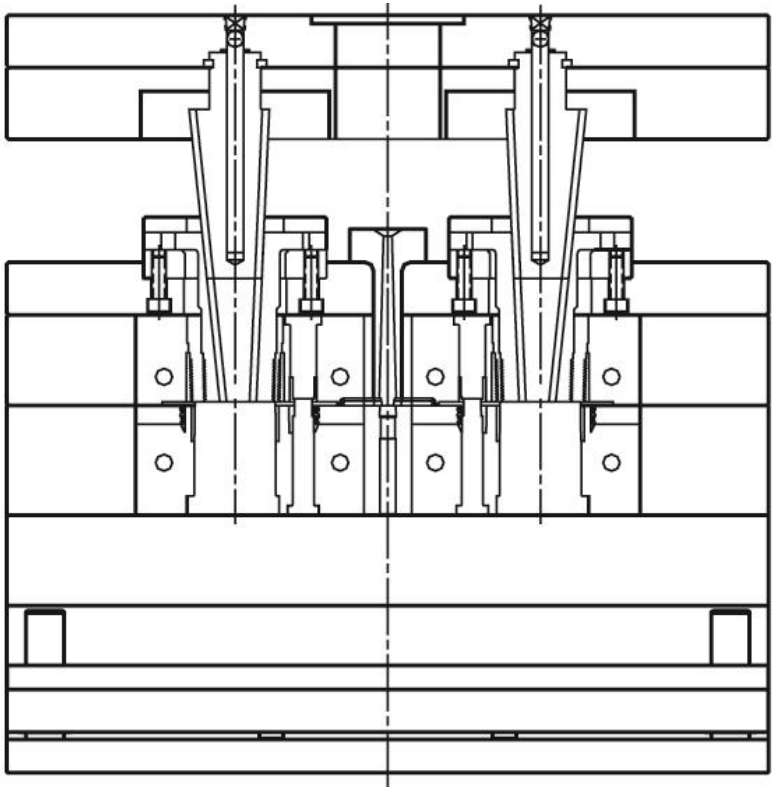

Reverse Gate

- Gating through the Center Pin of the DT Core can be done with either a Hot Runner or 3 Plate Runner.

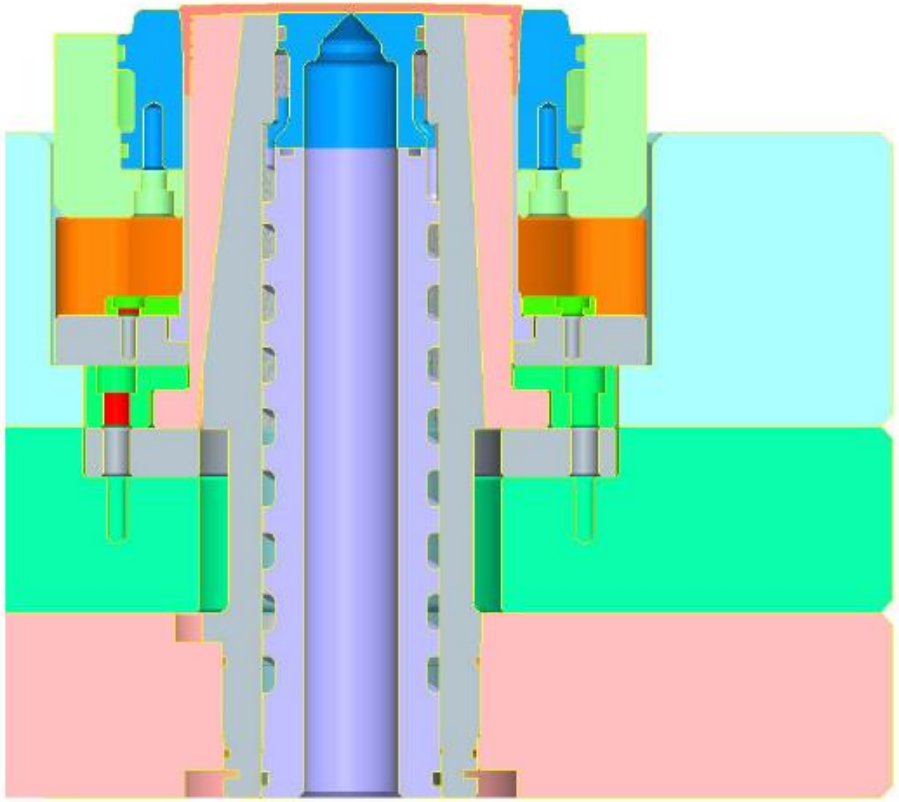

Coatings and lubricants

- DT Cores are capable of running dry in some applications, but coatings are recommended
- Coating options
  - DLC & XADC have been successfully used
  - Other options can be considered, however, application process must not result in any build up in corners
- Lubricants
  - A little goes a long way
  - Factory supplied with Setral grease which is food grade and does not migrate to the part surface

Mold Build & Assembly

Mold Build and Assembly

Core alignment and mold base machining

- Two points of alignment.
  - Stripper ring
  - Shaft diameter

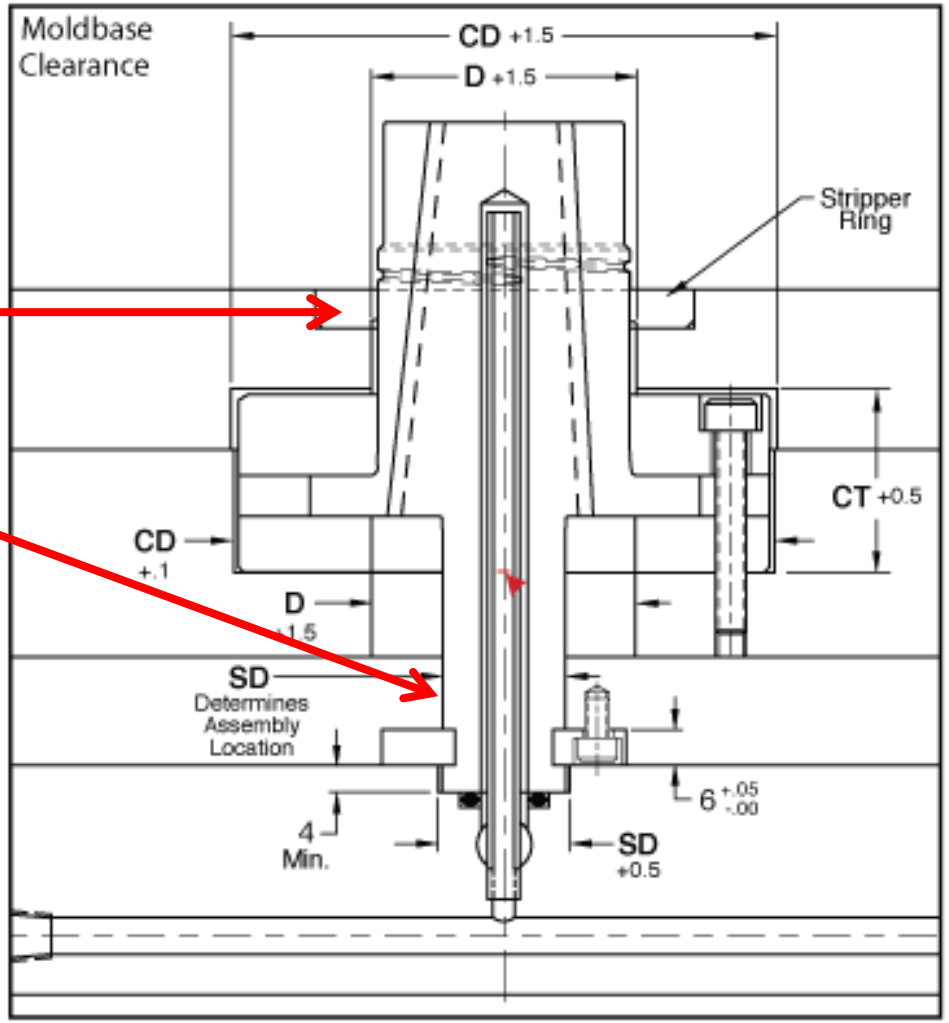

ROEHR TOOL SOLUTIONS, INC.

Mold Build and Assembly

Pin protrusion

- Top of center pin MUST be flush or above the height of the segments.
- This provides and air gap for the segments to collapse into.

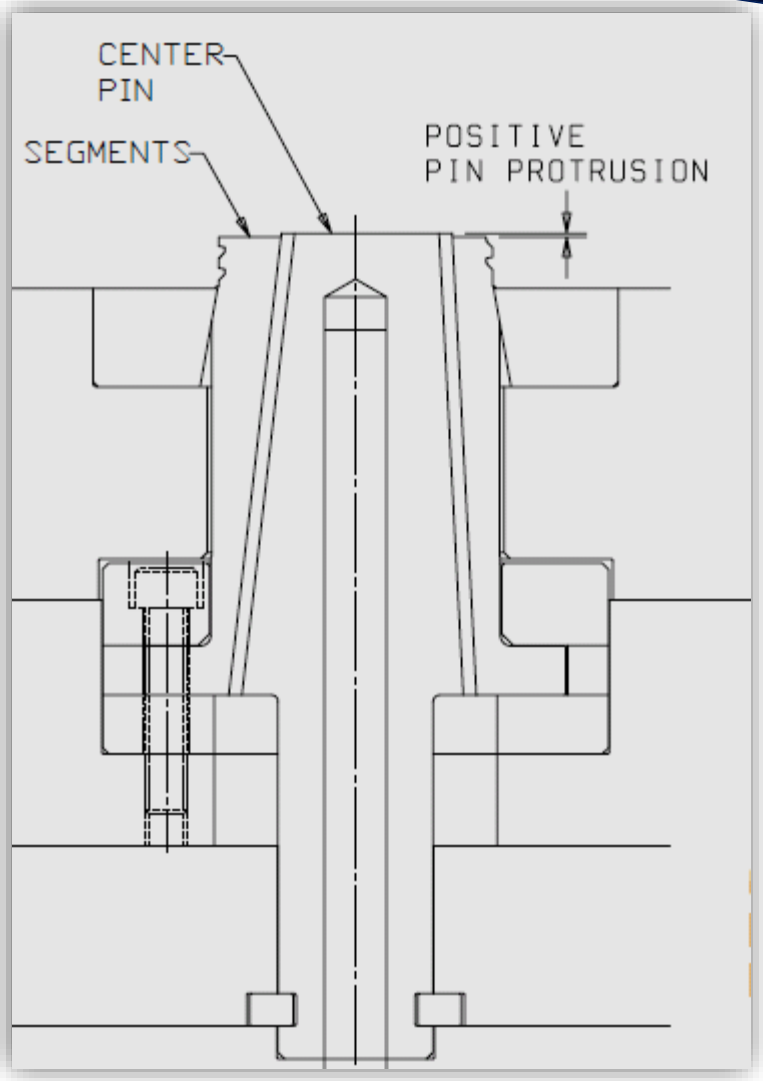

Machining molding details

- Fixture cores securely with grinding fixtures for machining.
- Cylindrical grinding and sinker EDM processes are acceptable.
- DO NOT turn in details on a lathe. Core damage will result.

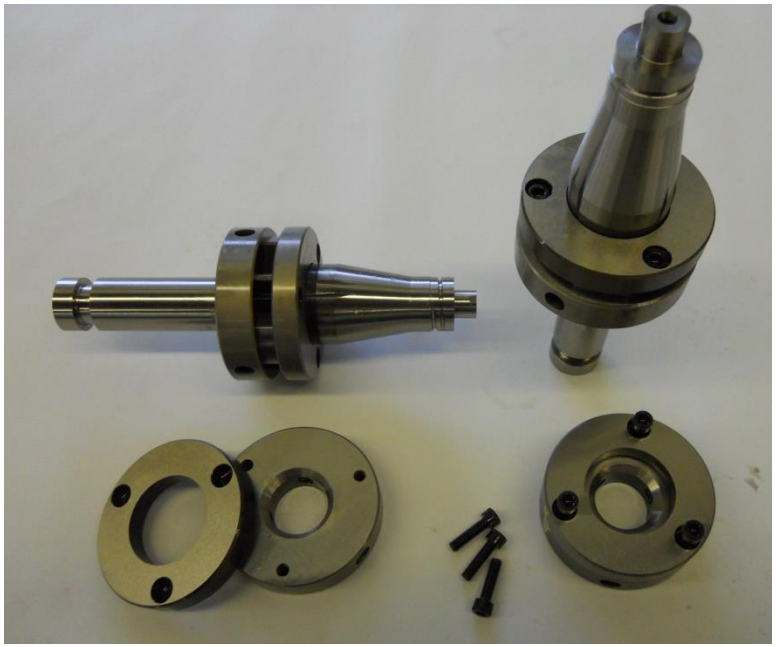

Maintenance & Repair

Preventative Maintenance Plan

- Regular Maintenance Plan for DT Cores should be established and followed.
- The following page is a recommended for proper care and maintenance of DT Cores.
- The performance of the DT Core is dependent on efficiency of the mold. We strongly recommend a thorough preventative maintenance plan be established and adhered to for the mold itself.
  - ToolingDocs (www.toolingdoc.com) is a recommended resource for PM planning and training of tool room personnel.

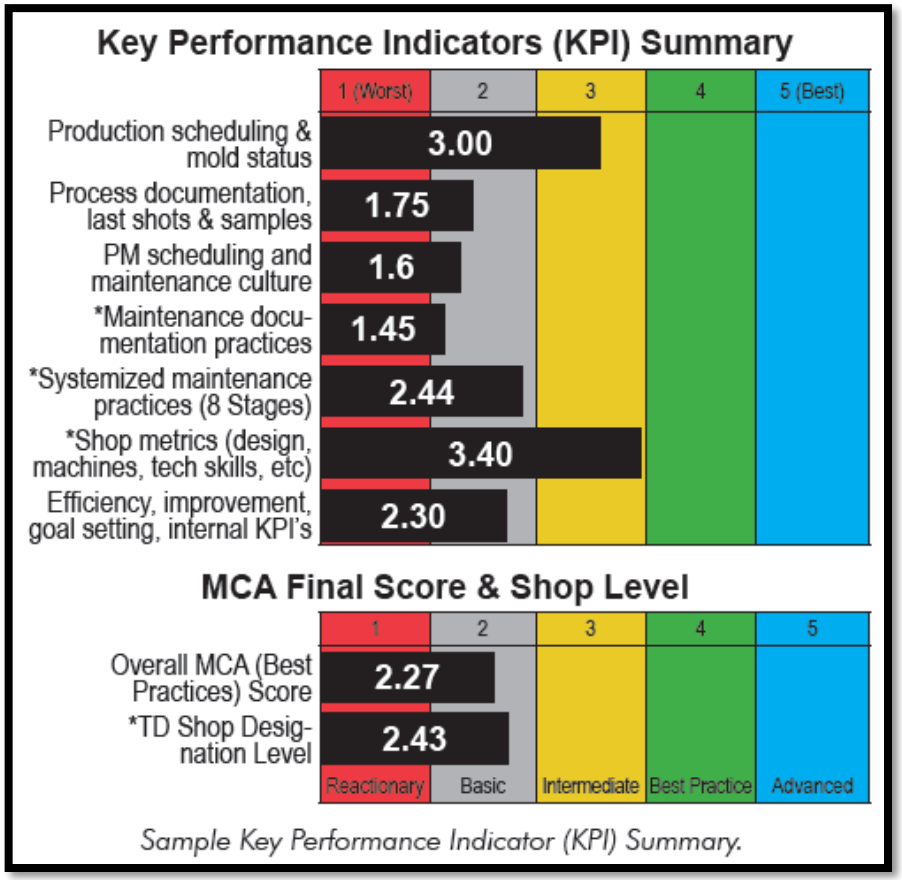

Sample Key Performance Indicator (KPI) Summary.

Maintenance & Repair

In Service Maintenance Plan

- Mold vents should be cleaned regularly to avoid build up.
- DT Core center pin can typically be accessed from the press and should be inspected and lubricated lightly as needed.

Full Maintenance Plan

- Proper maintenance plan for DT Cores must be established, followed and all activities documented.
- Recommended maintenance frequency (using Setral grease);
  - New mold PM after first 50k and 100k cycles
  - 100-250k cycles between PM's
- To prevent damage of cores when removed from the mold, a cleaning rack is recommended.
- DT Core must be fully disassembled and cleaned, preferably in an ultrasonic tank.
- Lubrication should be used unless otherwise approved at start of project.
- Minimum of 10% spares is recommended to maintain optimum mold efficiency.

Precautions

- Maintenance schedule should be adhered to and documented.
- Don’t over-stroke DT Cores when out of the mold (could damage edges of segments).
- Be careful of sharp edges (recommend Kevlar gloves).
- Mold assembly, center pin must be flush to proud of surface.
- Proper sequence must be confirmed and followed in production to avoid premature wear.

Disassembly process

- Note: all core pieces are numbered for proper alignment. It's recommended to keep individual core pieces together to avoid mixing with parts from other cores.

1. Place DT on solid surfaces so clamshell and center pin are supported

2. Remove 3 bolts from clamshell

Disassembly process

3. Remove top clamshell plate or retention sleeve

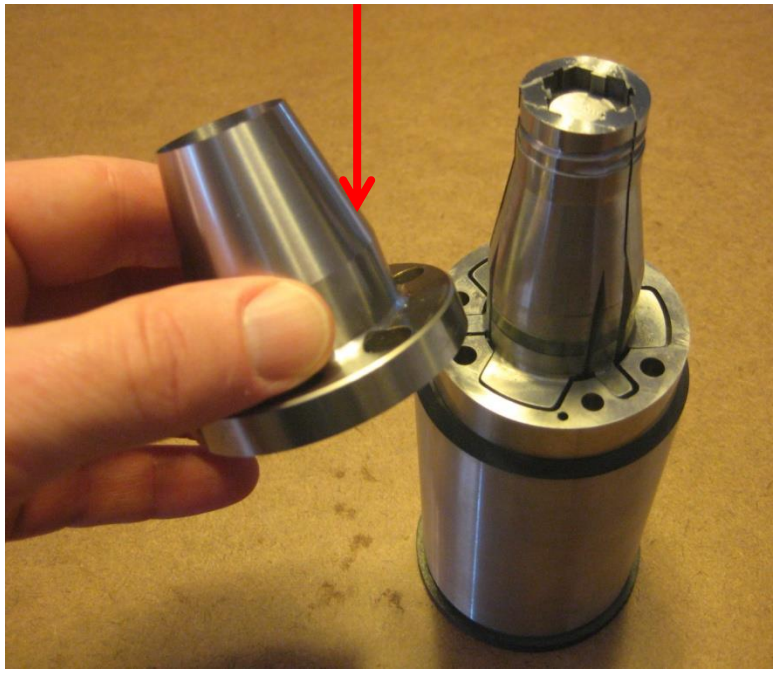

4. Remove center clamshell plate

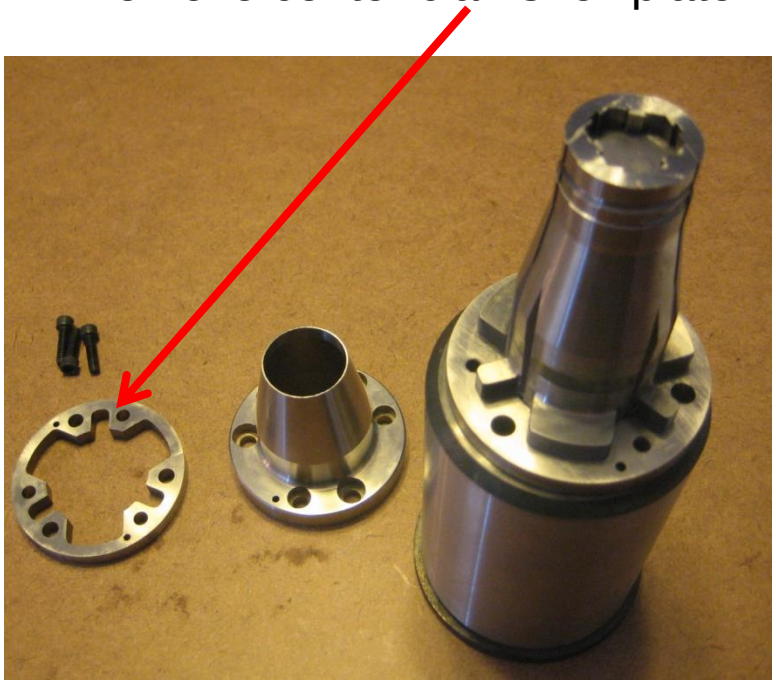

Disassembly process

5. Remove all 3 wide segments first

6. Remove all 3 small segments next

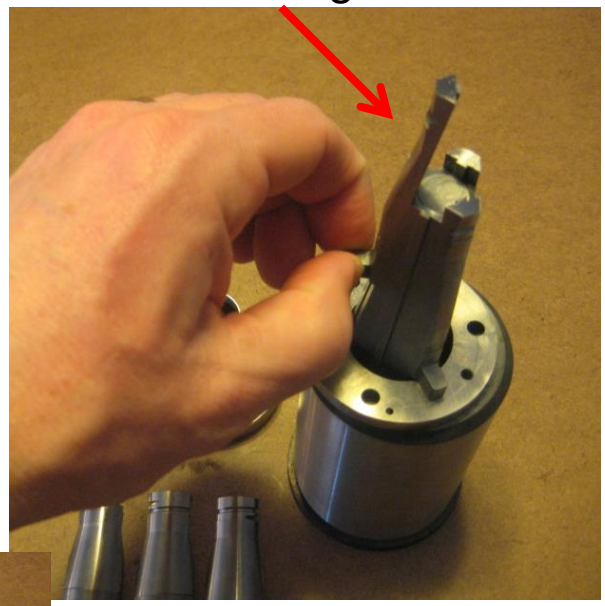

7. Remove center pin and bottom clamshell plate from stand

ROEHR TOOL SOLUTIONS, INC.

Cleaning the Cores

- Ultrasonic bath is recommended for all DT components
- Alternative is to spray down with degreaser and wipe thoroughly
- Use Q-Tips to get into smaller areas including the corners of the Dove Tail

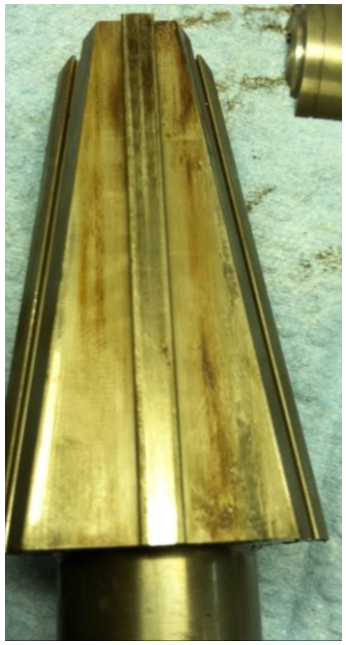

Before Cleaning

After Ultrasonic Cleaning

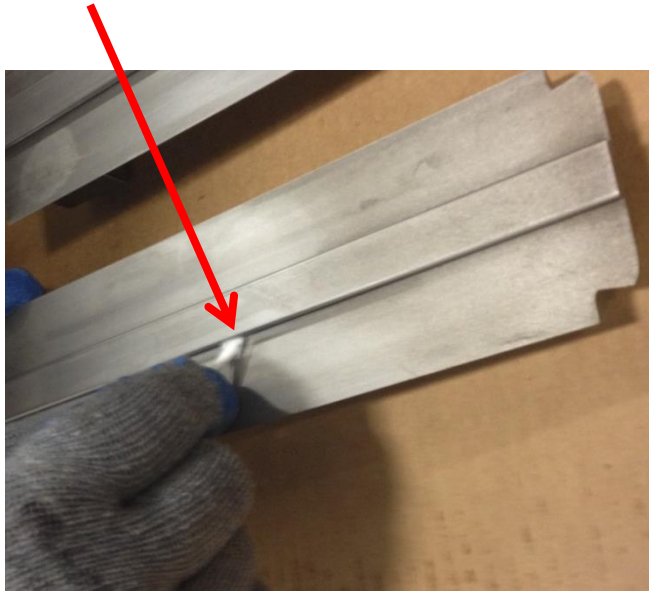

Lubrication

- Lubricants
  - Segments and Center Pin: Setral grease is applied during core construction and is recommended after all maintenance
  - Clamshell Plates: Setral or Super Grease are recommended
- Application
  - Apply Setral to center pin surfaces but stay away from top of pin by about 20% of the core height to avoid grease on parts
  - Apply grease to segment tails; top/bottom & left/right surfaces

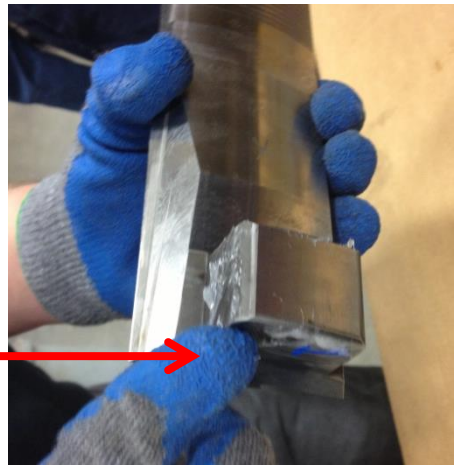

Assembly process

To ensure correct assembly each segment is numbered / marked to match the coinciding location of the core pin.

1. Set bottom clamshell plate and center pin on fixture
2. Place alignment pins (gauge, dowel, etc.) in bottom plate

3. Set center clamshell plate

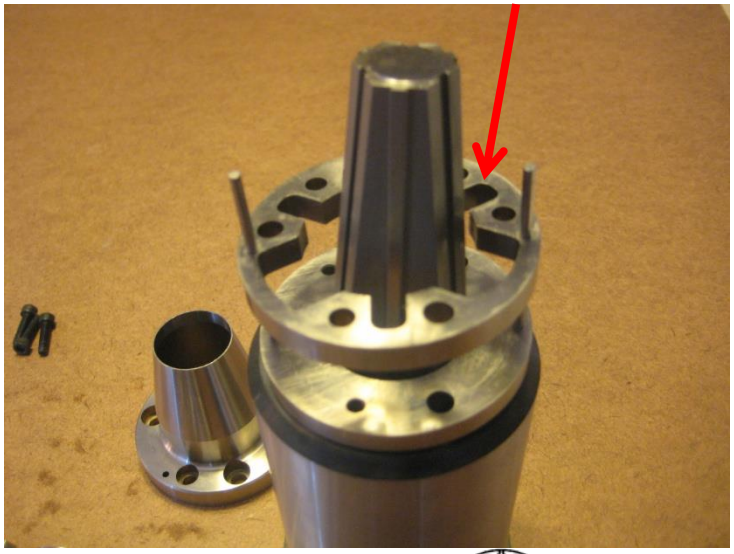

Assembly process

4. Install all 3 small segments first

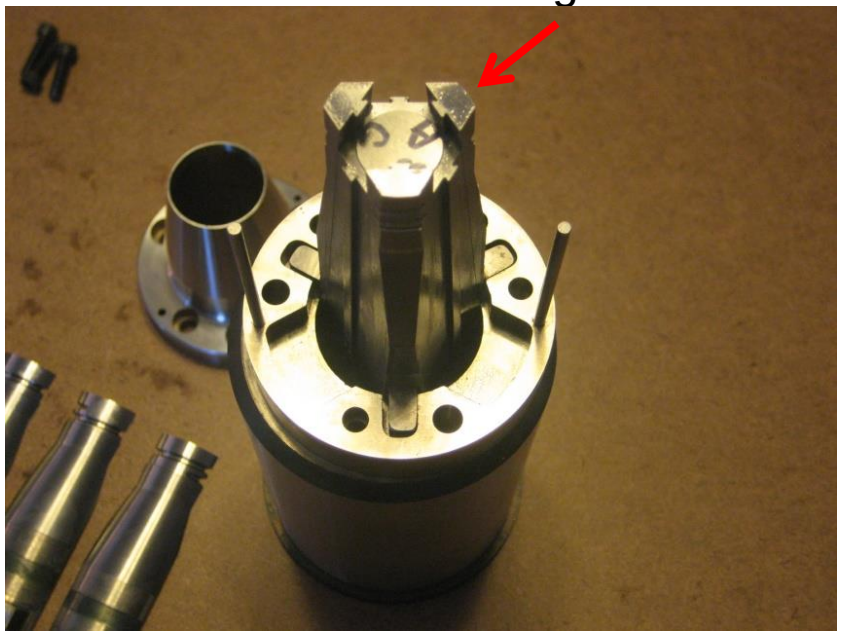

5. Install all 3 wide segments next

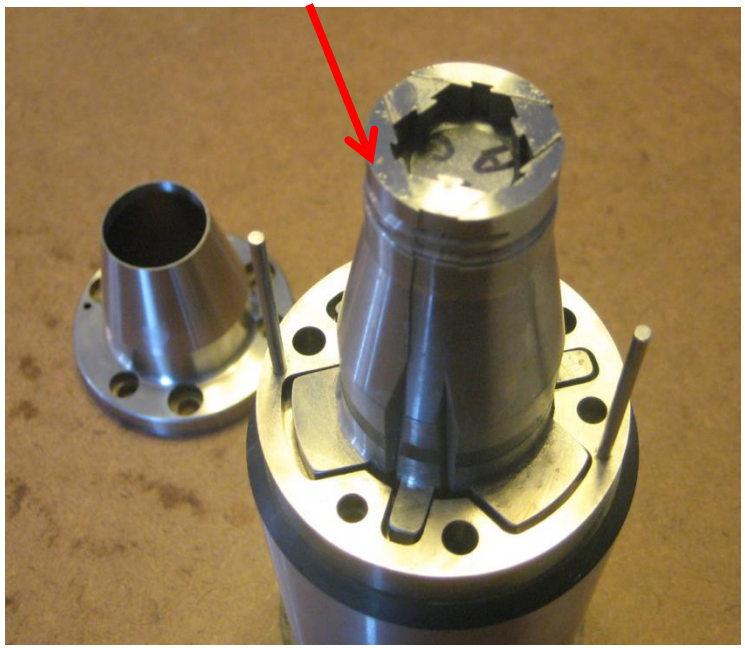

Notes:

- Ensure segments are being placed in proper position on center pin.
- Install segments from the top and slide down.
- Work each segment up and down several times to help spread lubrication and confirm there is no binding

Assembly process

6. Install top clamshell plate

7. Tighten clamshell bolts

8. Remove alignment pins

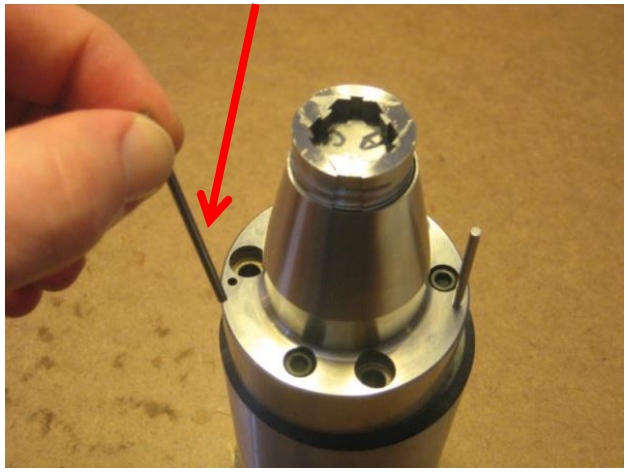

Repairing or Modifying Cores

- Core components can be welded and repaired using laser or micro-tig welding technology.

Quick Reference Checklists

Part Optimization

Part Design Checklist

- ❑ Confirm undercut depth allows for proper collapse and ejection
- ❑ Features on top of DT are either in line of collapse or on center pin with enough clearance to avoid damage from collapsing segments
- ❑ Undercut profile optimized
- ❑ Thread run-out to stop short of top of DT to avoid thin steel condition
- ❑ Part retention feature in place on ID of part
- ❑ Features on ID wall must be drafted in line of DT segments collapse
- ❑ If exact shrink rate is unknown, recommend diameters formed by DT core be designed steel safe for first trial

Mold Design Checklist

- ❑ Confirm proper sequence; method, collapse and eject strokes
- ❑ Recommend machine KO's tie in for positive return
- ❑ Part retention method defined
- ❑ Attachment method defined
- ❑ If shutting off on top of DT; don't design preload and DT must be fully expanded before shut off comes into position
- ❑ Good venting is essential at the parting line and leading to atmosphere
- ❑ Positive stops required for collapse and eject strokes
- ❑ DT center pin to be designed with positive pin protrusion
- ❑ Provide adequate cooling lines to DT center pins, avoiding looping of lines
- ❑ Confirm clearances per Roehr design standards

Mold Build and Assembly

Mold Assembly Checklist

- ❑ Confirm stack heights and clearances for DT fit
- ❑ Alignment of plates is critical to avoiding premature wear or galling
- ❑ Confirm correct collapse and eject strokes and positive stops in place
- ❑ All components must be moving freely on the bench
- ❑ Confirm DT center pin has positive protrusion
- ❑ Confirm shut off heights and no preload on DT
- ❑ Confirm proper water flow through all DT center pins
- ❑ Proper venting must be in place from PL to atmosphere
- ❑ Make sure all cores are cleaned and lubricated before installation

First Mold Sample

Mold Set-Up

- ❑ If using machine KOs, tie into the mold for positive plate return
- ❑ Confirm DT center pin has positive protrusion
- ❑ Confirm balanced cooling to all cores, avoid jumping water lines.
- ❑ MUST use proper sequence as determined by mold builder.
- ❑ Dry cycle mold for a minimum of 1hr on first sample
- ❑ Heat soak the mold prior to start up
- ❑ Inspect cores in press by staging forward to view Segments & Center Pins.
- ❑ At start up, make sure short shots are removed before setting core or shutting press.
- ❑ If more than one eject stroke is needed for part removal, then only stage stripper plate for additional required strokes. DT Cores are to be collapsed only once per cycle. **Expanding DT's into molded parts can cause damage to Cores!**

Maintenance Checklist

- ❑ Maintenance schedule should be adhered to and documented. For questions on best practices contact www.ToolingDocs.com.
- ❑ For detailed guidelines on assembly, disassembly and proper maintenance, download DT Training Manual at www.RoehrTool.com
- ❑ DT's must be fully disassembled and cleaned at all PMs
- ❑ Lubrication is recommended on center pin and segment tails, per DT Training Manual
- ❑ DT's must move easily without binding after reassembly
- ❑ For repair or modifications questions, contact Roehr Tool

Troubleshooting

Troubleshooting

Issue: damaged undercut or threads

- Possible Causes:
  - Inadequate stroke for collapse
  - Part falling on core
  - Sequence is wrong, ejecting before fully collapsed
  - Cavity finish pulling part off core
- Solutions:
  - Confirm proper collapse stroke
  - Confirm proper ejection stroke
  - Confirm part is retained on stripper ring or sleeve during collapse
  - Polish or add draft to cavity to ensure release

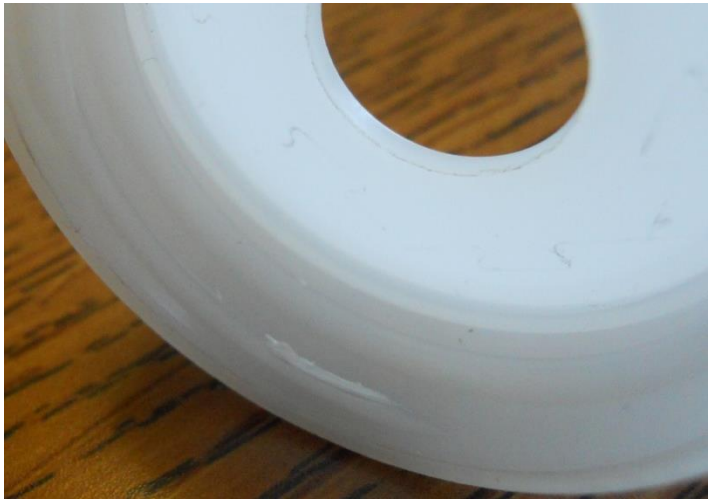

Troubleshooting

Issue: shavings or flash at threads

- Possible Causes:
  - Damaged edge of segment
  - Burrs on edges of segments from grinding or handling
  - Clamshell pocket depth or split ring position is incorrect causing segment to segment stepping
- Solutions:
  - If edges are damaged, return to Roehr for repair
  - If edges are sharp or have burrs, use a polishing stone to lightly break edges or remove burrs on all surfaces
  - Confirm heights and positive center pin protrusion

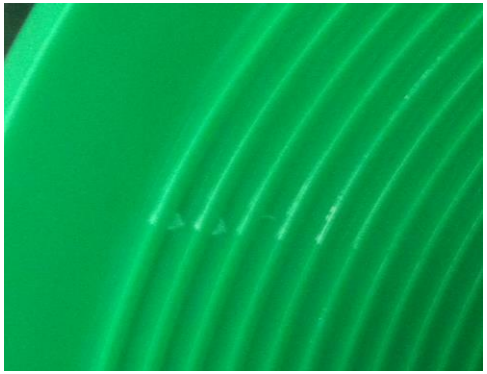

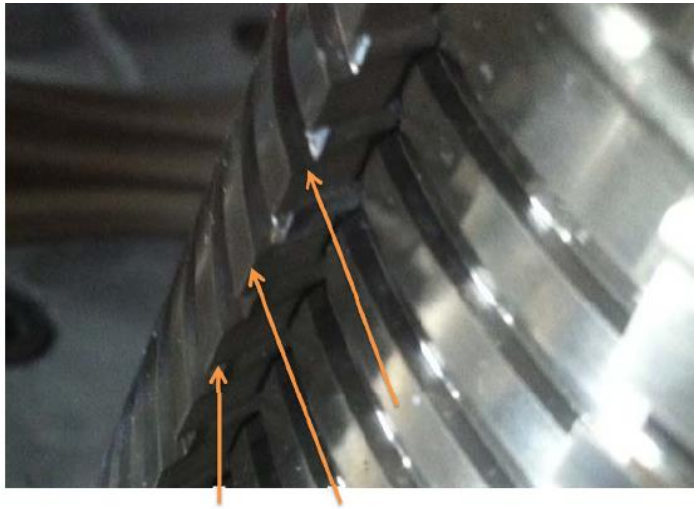

All 3 surfaces of thread were polished.

Issue: shavings on top of part

- Possible Causes:
  - Center pin recessed below top of segments
  - Burrs on edges of segments from grinding
- Solutions:
  - If edges are sharp or have burrs, use a polishing stone to lightly break edges or remove burrs on all surfaces
  - Confirm heights and positive center pin protrusion

Troubleshooting

Issue: galling between segments and center pin

- Possible Causes:
  - Mold base bores and pockets are not concentric or perpendicular to PL, causing misalignment between center pin and clamshell plates
  - Not following pre-determined maintenance plan
  - Water not running through the mold and/or DT Cores as designed
- Solutions:
  - Confirm plates are flat and all bore diameters and heights are correct
  - Implement maintenance plan at scheduled intervals and document
  - Confirm proper water flow through DTs and mold base plates

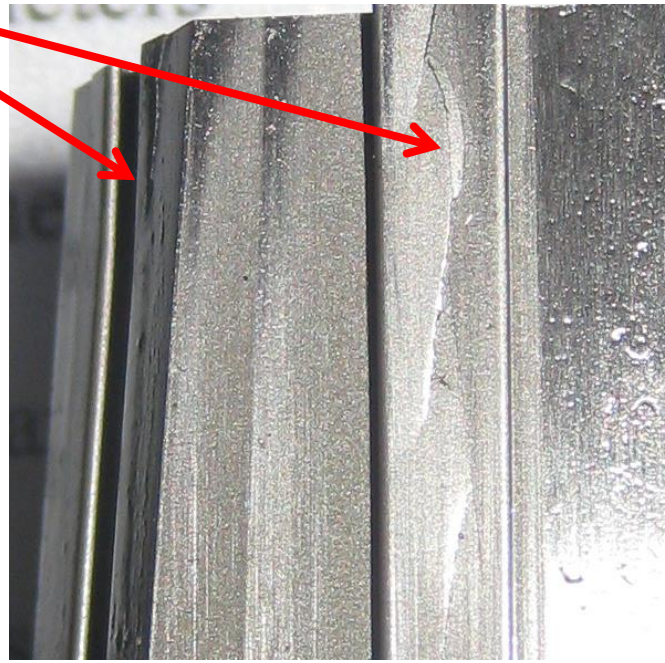

ROEHR TOOL SOLUTIONS, INC.

Troubleshooting

Issue: damaged or chipped dovetail features.

- Possible Causes:
  - Closing up on molded parts
  - Incorrect sequencing
- Solutions:
  - Ensure short shots and full parts have proper ejection from mold, establish mold start up procedure, or install vision system on mold
  - Confirm proper collapse and ejection strokes
  - Confirm part is retained on stripper ring or sleeve during collapse

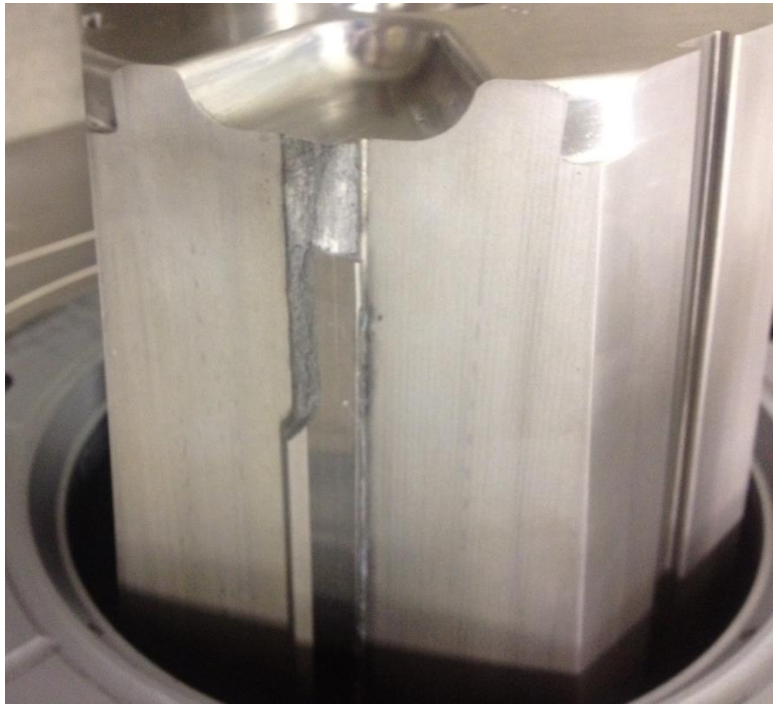

RTS Web Links

RTS Web Links

Roehr Website: http://www.roehrtool.com/

- Animations
- Monthly Newsletter
- Resources Page

YouTube: http://www.youtube.com/RoehrTool

Facebook: https://www.facebook.com/pages/Roehr-Tool-Corporation/450487311670767

LinkedIn: http://www.linkedin.com/company/roehr-tool-corporation